Product Catalogue
Machine Bearings for Building Services Equipment

Version 2022-10

For the latest online version, go to:
www.getzner.com/catalogue-hvac-en

getzner
engineering a quiet future

Applications

1 Air handling units (HVAC)

2 Fans

3 Elevator systems

4 Transformers

5 Chillers

6 Pipes

7 Compressors

8 Heat pumps

9 Pumps

10 Combined heat and power plants (CHP)

Products

Steel springs

Isotop MSN
Page 12

Isotop MSN-BL
Page 14

Isotop SD
Page 16

Isotop SD-BL
Page 18

Steel springs with damper core

Isotop DMSN
Page 20

Isotop DMSN-BL
Page 22

Isotop DSD
Page 24

Isotop DSD-BL
Page 26

Vibration dampers

Isotop MSN-DAMP
Page 30

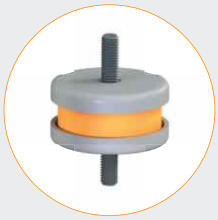

Isotop Compact
Page 32

Ceiling hangers

Isotop SD/Z
Page 36

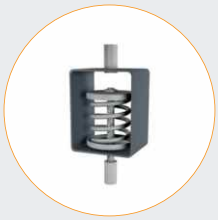

Isotop MSN/Z
Page 36

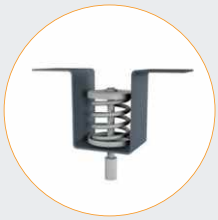

Isotop MSN/Z-LC
Page 36

Pressure-tension elements

Isotop DZE Mini
Page 38

Isotop DZE
Page 38

Isotop DZE-BL
Page 38

Sandwich elements

Isotop SE pro
Page 42

Isotop SE light
Page 44

Isotop SE-DE
Page 46

Isotop SE-DE Elevator
Page 46

Machine mountings

Isotop ENI
Page 48

Compressor bearings

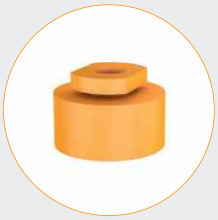

Sylomer® Compressor
Grommet CGR
Page 50

Transformer bearings

Elastic Washers EW
Page 51

Transformer bearings

Isotop Transformer
Pad TR
Page 52

Seismic machine bearings

SMM
www.getzner.com

Product benefits

- **Quieter equipment thanks to efficient vibration isolation**
- **Reduced secondary airborne noise even in critical installation locations (roof-top installation, mezzanine floors, etc.)**
- **Time and cost savings in design, procurement and installation**
- **Reduced maintenance costs**

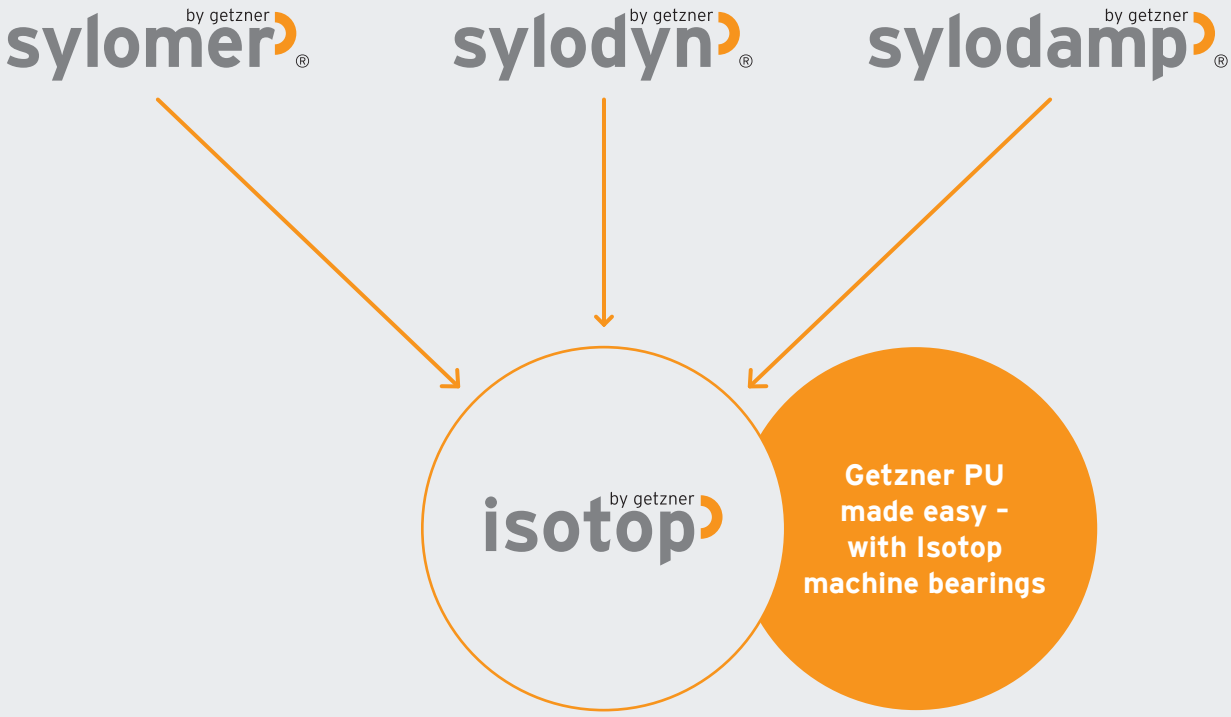

Product finder

Thanks to its wide range of products, Getzner Werkstoffe is able to tailor the bearings perfectly to customer requirements.

Isotop products are mainly used for low-frequency bearings. They can be tailored in line with the excitation frequency as required, from a frequency of 3 Hz.

- Mainly used for natural frequencies below 8 Hz
- Springs can be used for point loads from 4 kg to more than 5 t per element

Sylomer® and **Sylodyn®** are mainly used for full surface bearings with natural frequencies above approx. 7 Hz (excitation frequencies from 25 Hz). Ideally, Getzner HRB bearings are used for very high loads in the smallest spaces.

- Mainly used for natural frequencies above 7 Hz
- Load range up to 1,200 t/m²
- Available in standard thicknesses of 12.5 mm and 25 mm

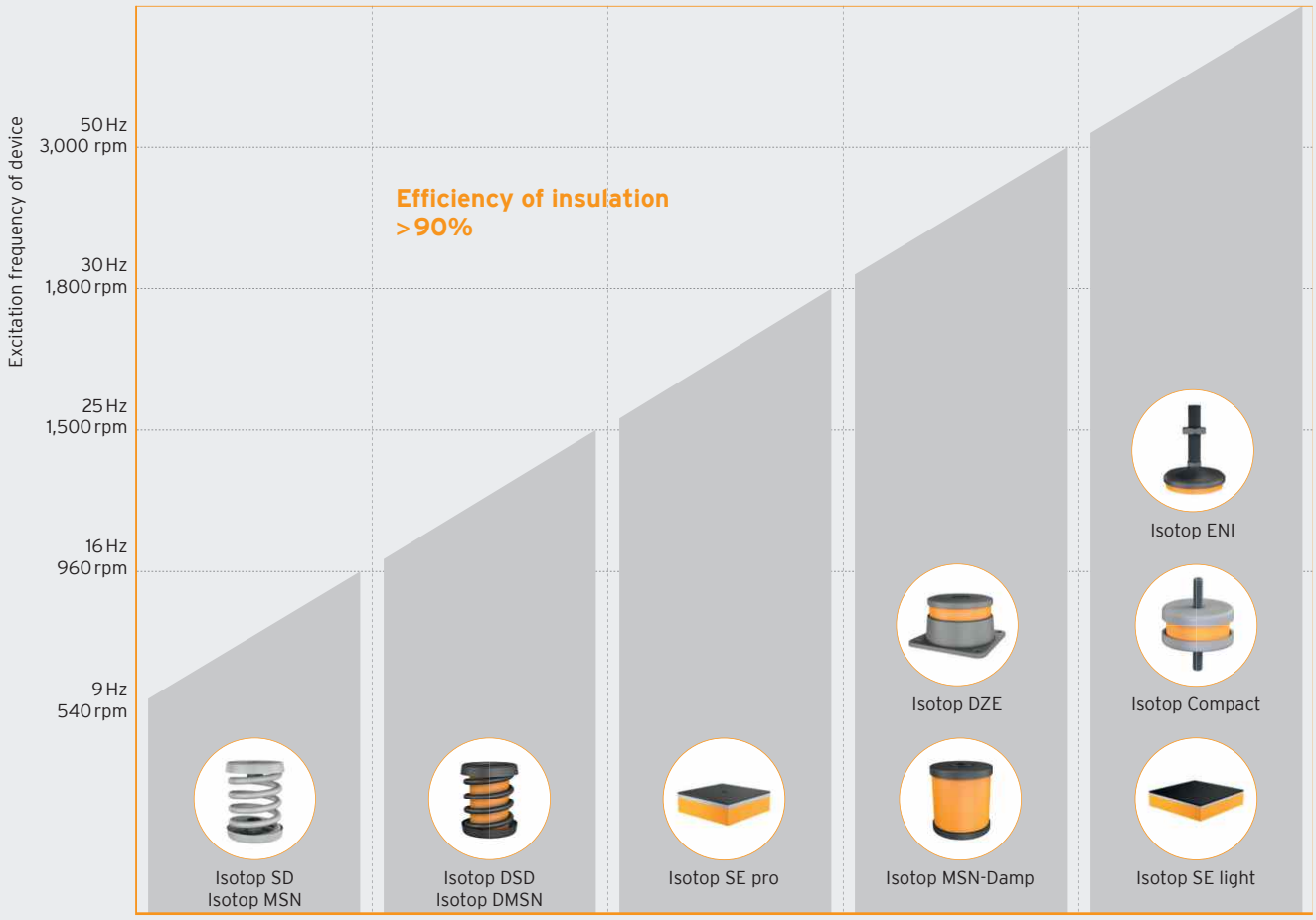

Requirements Isolation effect	High (e.g. hospitals, schools, office buildings, concert and theatres, etc.)		Medium (e.g. shopping centres, hotels, etc.)		Standard (e.g. industrial buildings, etc.)
Excitation frequency of device	9 Hz 540 rpm	16 Hz 960 rpm	25 Hz 1,500 rpm	30 Hz 1,800 rpm	50 Hz 3,000 rpm
Min. vertical natural frequency	3 Hz	5 Hz	7 Hz	9 Hz	14 Hz

* Natural frequencies are dependent on thickness and geometry.

EquipCalc

EquipCalc, the new online selection program, makes finding the right Isotop product even easier. A suggested product, together with a number of alternatives, is selected using data such as the weight of the bedded item and the number of bearings.

We can also help customers with complex system requirements. Our service portfolio includes:

- Calculation and efficacy forecasts
- Comparative measurements
- Material tests
- Customer-specific solutions

Compelling advantages:

Intuitive operation

Latest product information

Quick results

1 Following the project description ...

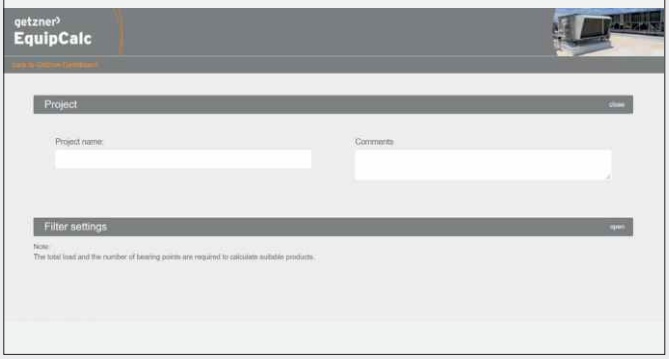

2 ... the relevant data is entered ...

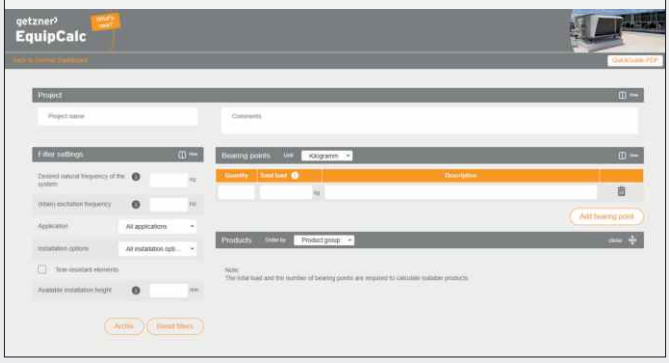

3 ... which is used to suggest a product.

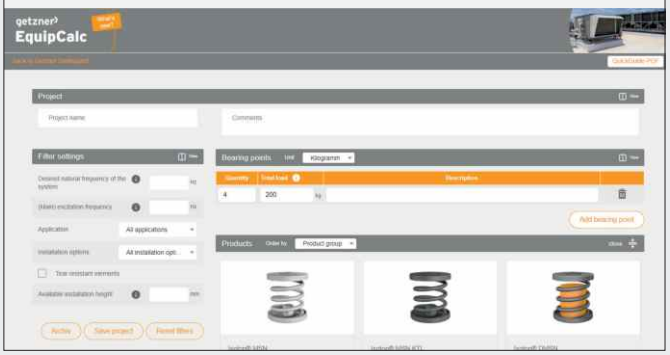

Data needed to choose the right product

- Total load
- Number of bearing points

Other filter options

- Desired, calculated, natural frequency (max)
- (Main) excitation frequency
- Application
- Assembly options
- Available installation height

REGISTER NOW!

apps.getzner.com

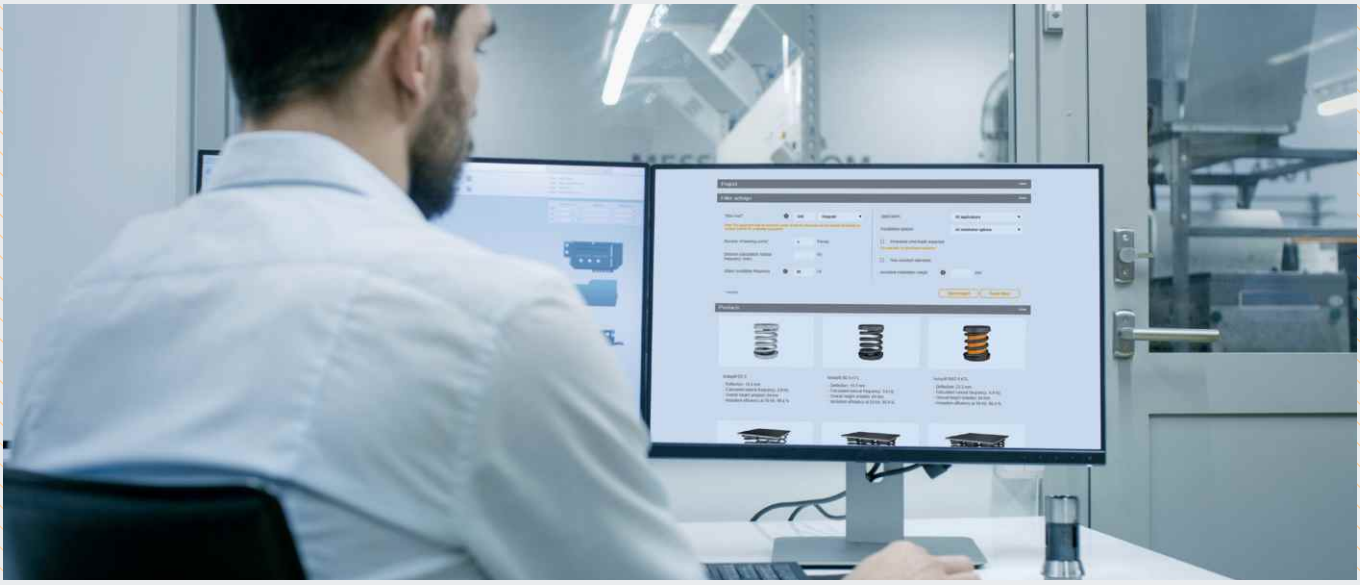

4 Detailed product information ...

Product details Isotop® DSD

Product dimensions (unloaded)

Height Diameter	h= Ø=	94 70	mm mm
Thread size		M10	
Natural frequency of the system	f0 =	5.0	Hz
Mean long term deflection (after one day)		22.0	mm
Mean long term deflection (after one month)		22.0	mm
Capacity		87	%
Total System load		200.0	kg

Quantity	Total load	Description	Product type	Order No.	Deflection (initial / one day / one month)	Natural frequency	Capacity
4 pcs.	200 kg		Isotop® DSD 3 KTL	39495	22.0 / 22.0 / 22.0 mm	5.0 Hz	87 %

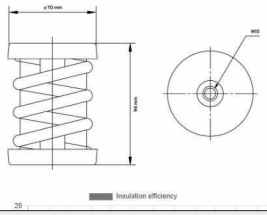

Frequency in Hz	Insulation in dB	Degree of insulation in %
2.5	2.4	-32
3.1	4.1	-61
4.0	7.6	-139
5.0	11.4	-271
5.0	11.4	-270
6.3	3.8	-55
8.0	-3.6	34
10.0	-8.9	64
12.5	-13.4	79
16.0	-18.0	87
20.0	-21.7	92

5 ... can be printed and forwarded for later use.

getzner
engineering a quiet future

Editor: Thomas Marte
Date: August 30, 2022

Isotop® DSD

Height (unloaded)	h	94	mm
Diameter (unloaded)	Ø	70	mm
Thread size		M10	
Natural frequency of the system		5.0	Hz
Mean initial deflection (after one day)		22.0	mm
Mean long term deflection (after one month)		22.0	mm
Capacity		87	%
Total System load		200.00	kg

Quantity	Total load	Description	Product type	Order No.	Deflection (initial / one day / one month)	Natural frequency	Capacity
4 pcs.	200 kg		Isotop® DSD 3 KTL	39495	22.0 / 22.0 / 22.0 mm	5.0 Hz	87 %

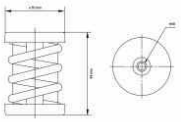

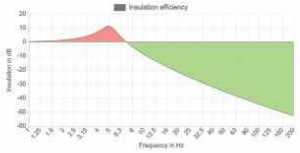

Frequency in Hz	Insulation in dB	Degree of insulation in %
2.5	2.4	-32
3.1	4.1	-61
4.0	7.6	-139
5.0	11.4	-271
5.0	11.4	-270
6.3	3.8	-55
8.0	-3.6	34
10.0	-8.9	64
12.5	-13.4	79
16.0	-18.0	87
20.0	-21.7	92
25.0	-25.3	95
31.5	-28.8	96
40.0	-32.3	98
50.0	-35.4	98.3
63.0	-38.5	98.8
80.0	-41.6	99.2
100.0	-44.4	99.4
125.0	-47.2	99.6
160.0	-50.1	99.7
200.0	-52.8	99.8

AUSTRIA – Marz GERMANY – Berlin – Munich – Stuttgart FRANCE – Lyon JORDAN – Amman
JAPAN – Tokyo INDIA – Pune CHINA – Beijing USA – Charlotte
www.getzner.com

getzner
engineering a quiet future

Selection matrix

	Steel springs				Steel springs with damper core				Vibration dampers	
Natural frequency Load range Unloaded height	**MSN** 3.5 Hz 3 to 90 kg 57 mm	**MSN-BL** 3.5 Hz 117 to 800 kg 75 mm	**SD** 3.2 Hz 20 to 525 kg 94 mm	**SD-BL** 3.4 Hz 690 to 4,730 kg 114 mm	**DMSN** 5.3 to 9.5 Hz 11 to 100 kg 57 mm	**DMSN-BL** 5.3 to 6.6 Hz 215 to 1,590 kg 75 mm	**DSD** 4.2 to 5.6 Hz 24 to 650 kg 94 mm	**DSD-BL** 4.3 to 5.2 Hz 400 to 5,850 kg 114 mm	**MSN-DAMP** 7.4 to 9.2 Hz 6 to 35 kg 45 mm (T/T)	**Compact** 9.9 to 12.1 Hz 4 to 95 kg 28 mm (T/T)
	Page 12	Page 14	Page 16	Page 18	Page 20	Page 22	Page 24	Page 26	Page 30	Page 32
Air handling units (HVAC)			●	●			●	●		
Fans	●		●		○		○			○
Elevator systems										
Chillers			○	○			●	●		
Pipes		○		○						
Compressors	○		○		●		●	●	●	●
Heat pumps					●		●		●	●
Pumps	○	○	○	○	●	●	●	●		
Combined heat and power plants (CHP)					●	●	●	●		
Transformers				○				○		

● Recommended ○ Alternative

Ceiling hangers	Pressure-tension elements	Sandwich elements			Machine mountings	Compressor bearings	Elastic washers	Transformer bearings	
MSN/Z + SD/Z 3.2 to 3.5 Hz 3 to 420 kg 105 to 190 mm	**DZE** 7 to 12 Hz 8 to 4,135 kg 49 to 117 mm	**SE pro** 7.5 to 9.6 Hz 90 to 2,050 kg 51.5 mm	**SE light** 10.8 to 12.7 Hz 63 to 930 kg 33 mm	**SE-DE** 5.7 to 10.4 Hz 105 to 3,480 kg 111 or 149 mm	**ENI** 9.7 to 10.9 Hz 61 to 260 kg 118 mm	**CGR** 12.7 to 14 Hz 3 to 20 kg 25 mm	**EW** 6 to 21 mm	**TR** 8.5 to 11.3 Hz 100 to 2,500 kg 69 mm	Natural frequency Load range Unloaded height
Page 36	Page 38	Page 42	Page 44	Page 46	Page 48	Page 50	Page 51	Page 52	
	◗	●	●	◗	●				**Air handling units (HVAC)**
●	◗								**Fans**
	◗			●					**Elevator systems**
	●	●	◗	◗	●				**Chillers**
●									**Pipes**
						●	●		**Compressors**
	◗	◗	●		●				**Heat pumps**
	●								**Pumps**
●	●	●	◗						**Combined heat and power plants (CHP)**
								●	**Transformers**

● Recommended ◗ Alternative

Isotop MSN

Steel spring isolators for low installation heights

- Natural frequency from 3.5 Hz
- Low overall height of 57 mm
- Electro-galvanised or cathodic dip-coated (CDC) for increased corrosion protection
- Secure connection between the plate and the spring thanks to special adhesive
- M 8 internal thread
- Simple load control thanks to open design
- Spring design conforms to DIN EN 13906-1

			Maximum load in kg	Maximum load in N	Natural frequency at maximum load	Packaging unit	Order number
MSN spring element galvanised	Isotop MSN 1		3	29	3.5 Hz	50 pcs.	**39376**
	Isotop MSN 2		5	49	3.5 Hz	50 pcs.	**39377**
	Isotop MSN 3		9	88	3.5 Hz	50 pcs.	**39378**
	Isotop MSN 4		14	137	3.5 Hz	50 pcs.	**39379**
	Isotop MSN 5		23	226	3.5 Hz	50 pcs.	**39380**
	Isotop MSN 6		35	343	3.5 Hz	50 pcs.	**39381**
	Isotop MSN 7		53	519	3.5 Hz	50 pcs.	**39382**
	Isotop MSN 8		90	883	3.5 Hz	50 pcs.	**39383**
MSN spring element KTL	Isotop MSN 1 KTL		3	29	3.5 Hz	100 pcs.	**39384**
	Isotop MSN 2 KTL		5	49	3.5 Hz	100 pcs.	**39415**
	Isotop MSN 3 KTL		9	88	3.5 Hz	50 pcs.	**39416**
	Isotop MSN 4 KTL		14	137	3.5 Hz	50 pcs.	**39417**
	Isotop MSN 5 KTL		23	226	3.5 Hz	50 pcs.	**39418**
	Isotop MSN 6 KTL		35	343	3.5 Hz	50 pcs.	**39419**
	Isotop MSN 7 KTL		53	519	3.5 Hz	50 pcs.	**39420**
	Isotop MSN 8 KTL		90	883	3.5 Hz	50 pcs.	**39421**
Height adjustment for MSN/ DMSN	Isotop NV 1–8 MSN	M 8	for MSN 1 to 8			50 pcs.	**47322**

Isotop MSN (unloaded)

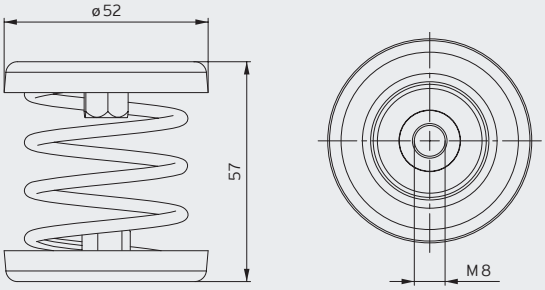

Isotop NV 1-8 MSN

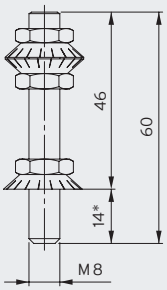

*Thread reach MSN/DMSN

Radial fan in an HVAC system

External unit of a heat pump on a wall bracket

Isotop MSN 1– MSN 4

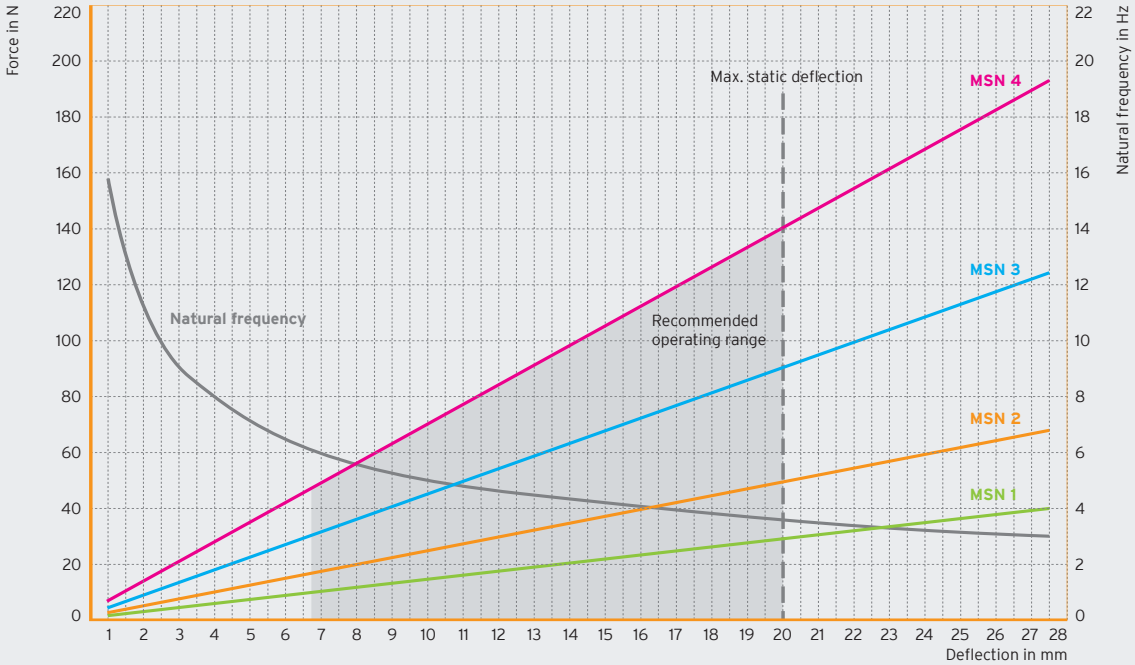

Isotop MSN 5– MSN 8

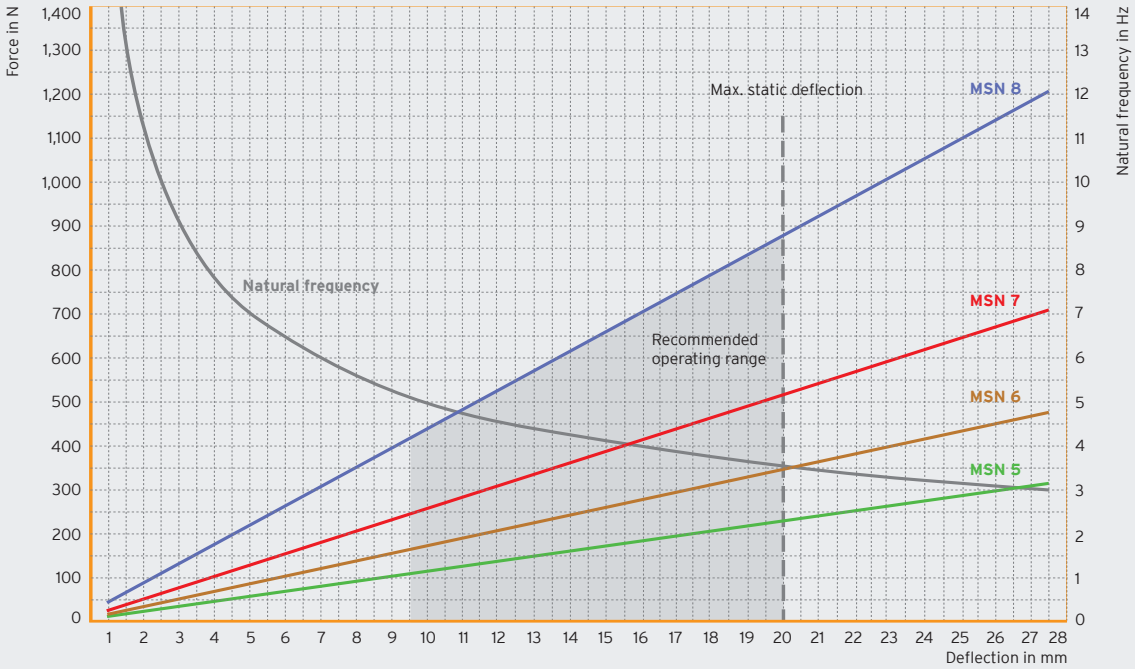

Isotop MSN-BL

MSN steel spring block element for low installation heights and high loads

- Natural frequency from 3.5 Hz
- Low overall height of 75 mm
- High load capacity of up to 800 kg per element
- 5 mm top plate and base plate fitted with 4 mm Sylomer® anti-slip plate
- CDC coating of springs and powder coating of pressure plates for outstanding corrosion protection
- Secure connection between the plate and the spring thanks to special adhesive
- Top plate with M10 thread
- Simple load control thanks to open design

		Maximum load in kg	Maximum load in N	Natural frequency at maximum load	Packaging unit	Order number
MSN-BL	Isotop MSN-BL4-52/62	117	1,147	3.5 Hz	4 pcs.	**47289**
	Isotop MSN-BL4-74/80	212	2,079	3.5 Hz	4 pcs.	**47293**
	Isotop MSN-BL4-70/84	360	3,531	3.5 Hz	4 pcs.	**47292**
	Isotop MSN-BL6-72/84	465	4,561	3.5 Hz	50 pcs.	**OR**
	Isotop MSN-BL6-70/86	535	5,248	3.5 Hz	50 pcs.	**OR**
	Isotop MSN-BL9-73/86	695	6,817	3.5 Hz	50 pcs.	**OR**
	Isotop MSN-BL9-70/89	800	7,848	3.5 Hz	150 pcs.	**OR**

Not held in stock. Delivery time on request (approx. 15 working days from the factory).
OR ... On request

Isotop MSN-BL 4 (unloaded)

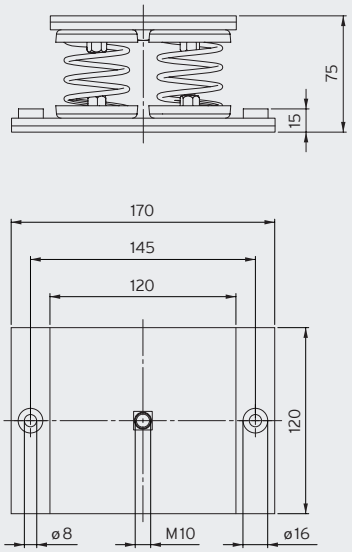

Isotop MSN-BL 6 (unloaded)

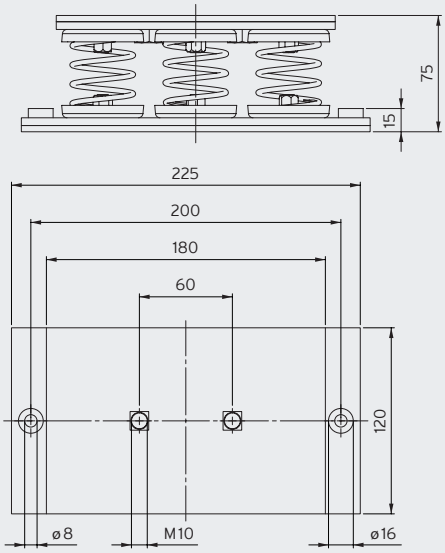

Isotop MSN-BL 9 (unloaded)

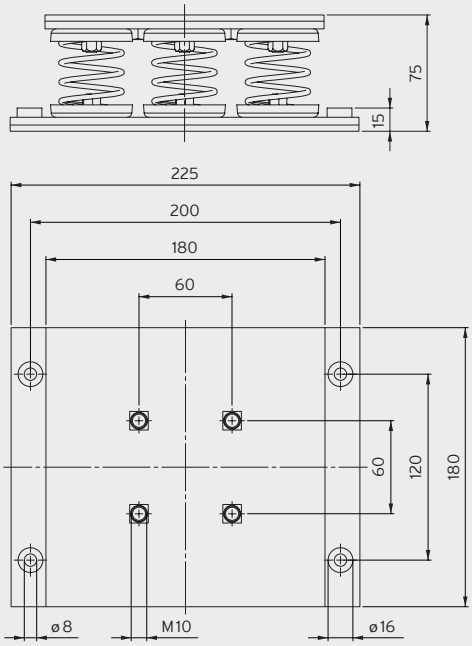

Customised block elements available on request

Bearing of duct silencer

Isotop MSN-BL4 and MSN-BL6

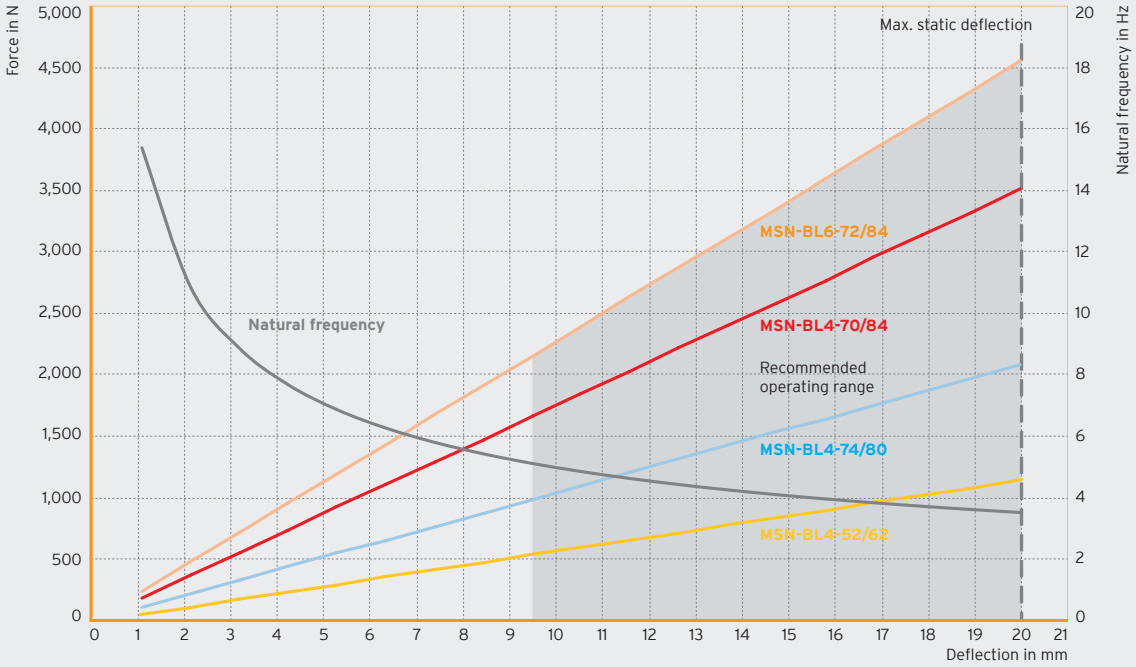

Isotop MSN-BL6 and MSN-BL9

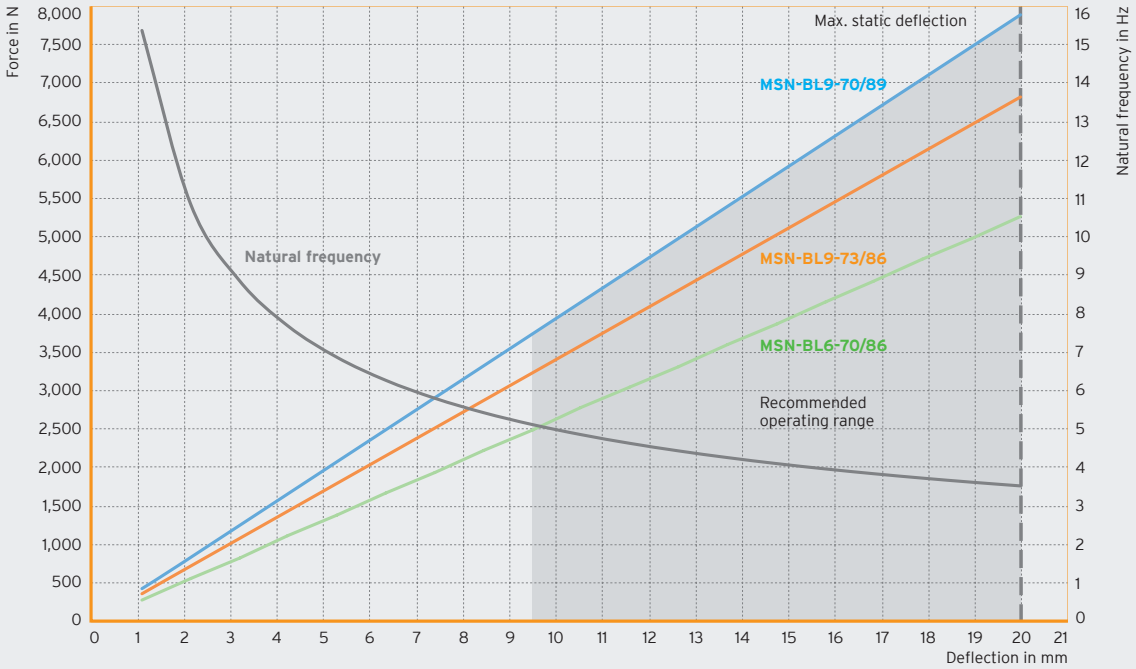

Isotop SD

Steel spring isolators

- Natural frequency from 3.2 Hz
- Electro-galvanised or cathodic dip-coated (CDC) for increased corrosion protection
- Secure connection between the plate and the spring thanks to special adhesive
- M10 internal thread
- Suitable base plate and/or height adjustment available
- Base plate with damping element (FP/K) also isolates higher frequencies
- Simple load control thanks to open design
- Spring design conforms to DIN EN 13906-1

			Maximum load in kg	Maximum load in N	Natural frequency at maximum load	Packaging unit	Order number
SD spring element galvanised	Isotop SD 1		20	196	3.2 Hz	50 pcs.	**39443**
	Isotop SD 2		33	324	3.2 Hz	50 pcs.	**39444**
	Isotop SD 3		52	510	3.2 Hz	50 pcs.	**39003**
	Isotop SD 4		82	804	3.2 Hz	50 pcs.	**39455**
	Isotop SD 5		123	1,206	3.2 Hz	50 pcs.	**39004**
	Isotop SD 6		195	1,913	3.2 Hz	50 pcs.	**39456**
	Isotop SD 7		310	3,041	3.2 Hz	50 pcs.	**39457**
	Isotop SD 8		420	4,120	3.4 Hz	50 pcs.	**39458**
	Isotop SD 9		525	5,150	3.4 Hz	50 pcs.	**39459**
SD spring element KTL	Isotop SD 1 KTL		20	196	3.2 Hz	100 pcs.	**39460**
	Isotop SD 2 KTL		33	324	3.2 Hz	100 pcs.	**39461**
	Isotop SD 3 KTL		52	510	3.2 Hz	50 pcs.	**39462**
	Isotop SD 4 KTL		82	804	3.2 Hz	50 pcs.	**39463**
	Isotop SD 5 KTL		123	1,206	3.2 Hz	50 pcs.	**39464**
	Isotop SD 6 KTL		195	1,913	3.2 Hz	50 pcs.	**39465**
	Isotop SD 7 KTL		310	3,041	3.2 Hz	50 pcs.	**39466**
	Isotop SD 8 KTL		420	4,120	3.4 Hz	100 pcs.	**39467**
	Isotop SD 9 KTL		525	5,150	3.4 Hz	100 pcs.	**39468**
Base plate FP/K with damping element for SD/DSD	Isotop FP/K 1–9		for SD 1 to 9		including screws[1]	50 pcs.	**38216**
	Isotop FP/K 1–9 KTL		for SD 1 to 9		including screws[1]	50 pcs.	**39158**
Base plate FP for SD/DSD	Isotop FP 1–9		for SD 1 to 9		without screws	50 pcs.	**39536**
	Isotop FP 1–9 KTL		for SD 1 to 9		without screws	50 pcs.	**39537**
Height adjustment for SD/DSD	Isotop NV 1–9	M10	for SD 1 to 9			50 pcs.	**47321**

[1] M10 connecting screws between base plate and spring

Isotop SD (unloaded)

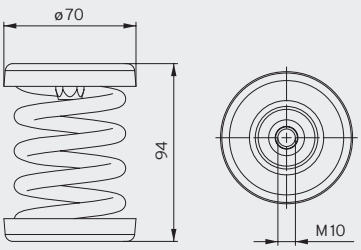

Isotop FP/K

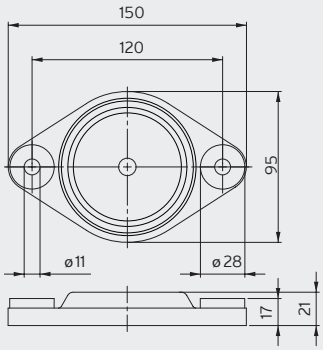

Isotop FP

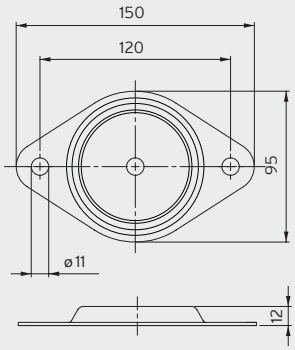

Isotop NV 1-9

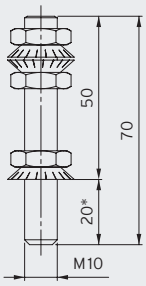

*Thread reach SD/DSD

Bearing of belt-driven fans

Bearing of HVAC unit with
Isotop SD and Isotop FP/K

Isotop SD1 – SD4

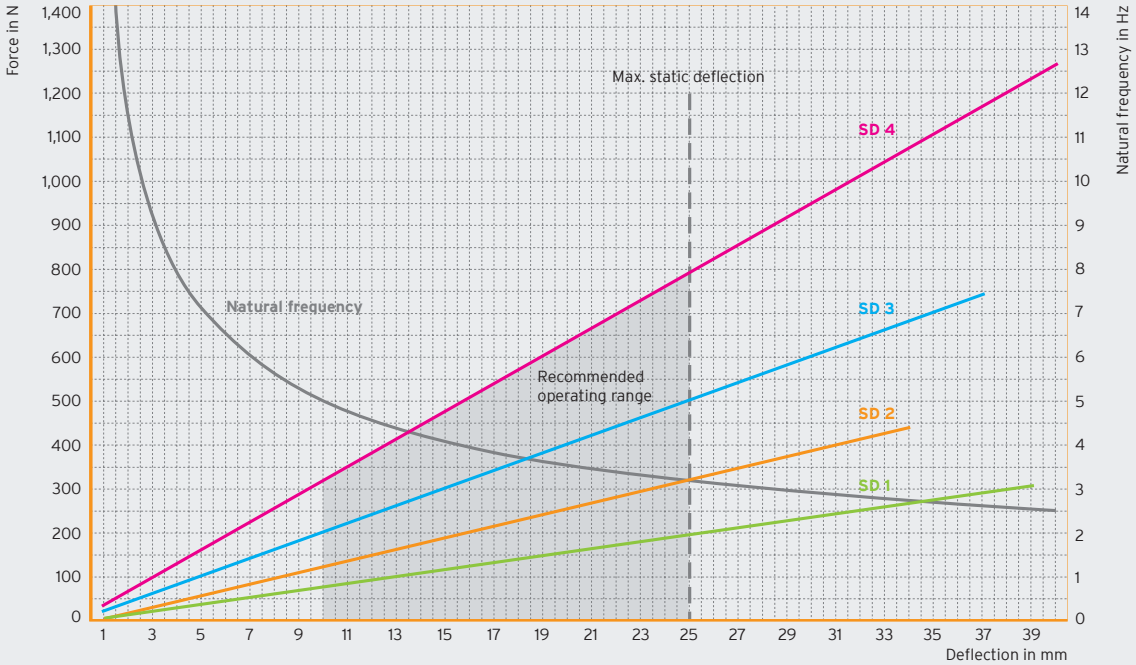

Isotop SD5 – SD9

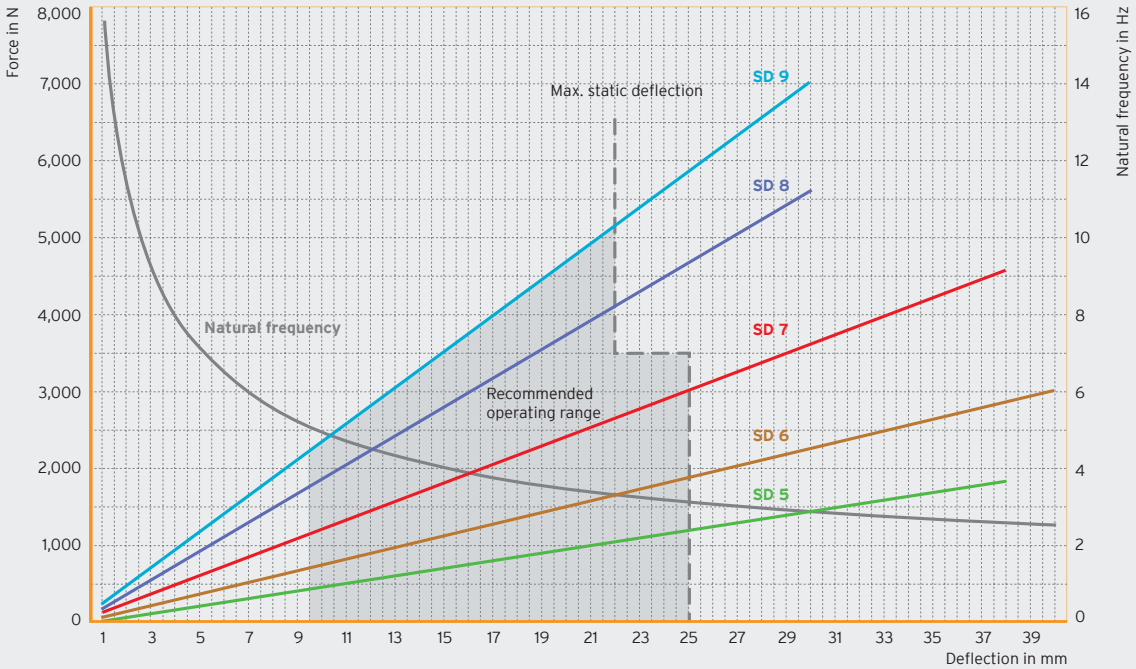

Isotop SD-BL

SD steel spring block element

- Natural frequency from 3.4 Hz
- High load capacity of up to 4,730 kg per element
- 6 mm top plate and base plate fitted with 4 mm Sylomer® anti-slip plate
- CDC coating of springs and powder coating of pressure plates for outstanding corrosion protection
- Secure connection between the plate and the spring thanks to special adhesive
- Top plate with M12 thread
- Simple load control thanks to open design

		Maximum load in kg	Maximum load in N	Natural frequency at maximum load	Packaging unit	Order number
SD-BL	Isotop SD-BL2-71/81	690	6,769	3.4 Hz	4 pcs.	**47298**
	Isotop SD-BL2-82/90	840	8,240	3.4 Hz	4 pcs.	**47300**
	Isotop SD-BL2-80/92	1,050	10,301	3.4 Hz	4 pcs.	**47299**
	Isotop SD-BL4-84/90	1,680	16,481	3.4 Hz	4 pcs.	**47282**
	Isotop SD-BL4-82/92	1,890	18,541	3.4 Hz	4 pcs.	**47284**
	Isotop SD-BL4-80/94	2,100	20,601	3.4 Hz	4 pcs.	**47285**
	Isotop SD-BL6-84/92	2,730	26,781	3.4 Hz	50 pcs.	**OR**
	Isotop SD-BL9-80/99	4,730	46,401	3.4 Hz	50 pcs.	**OR**

Not held in stock. Delivery time on request (approx. 15 working days from the factory).
OR ... On request

Isotop SD-BL 2 (unloaded)

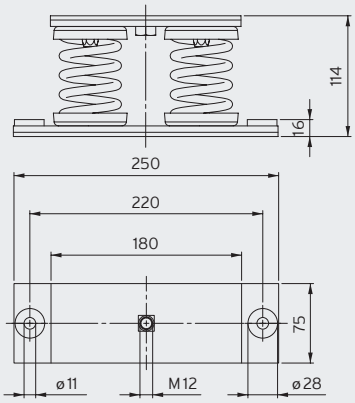

Isotop SD-BL 4 (unloaded)

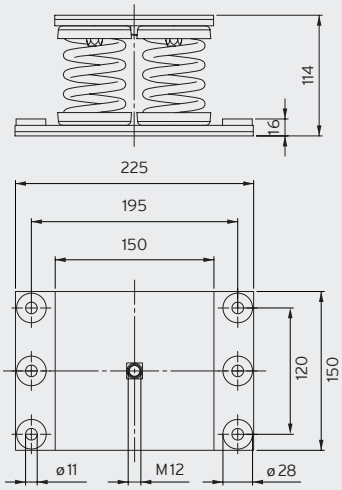

Isotop SD-BL 6 (unloaded)

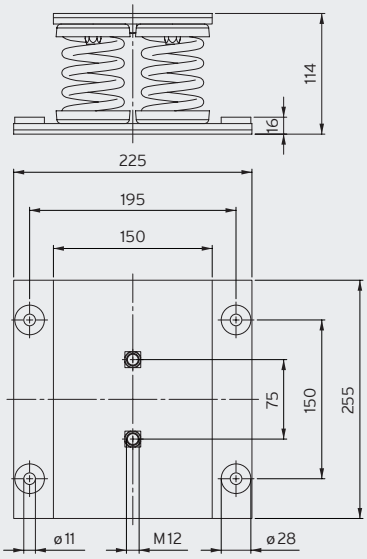

Isotop SD-BL 9 (unloaded)

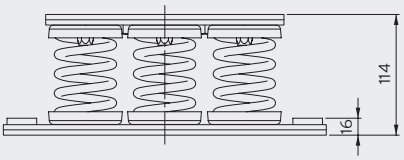

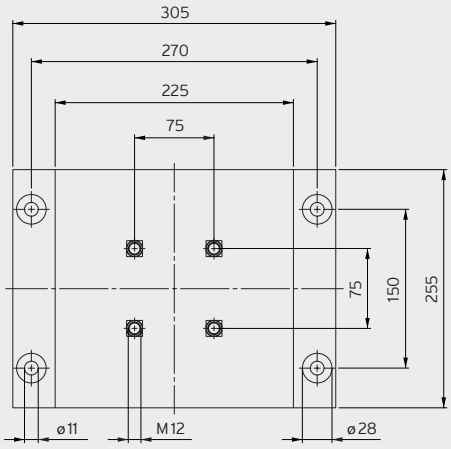

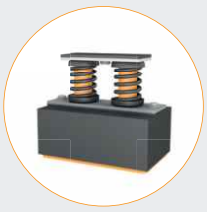

Isotop SD-BL2 and SD-BL4 optionally available with spacer base

Details on page 28

Customised block elements available on request

Bearing of pumps with additional mass

Roof-mounted HVAC system

Isotop SD-BL2 and SD-BL4

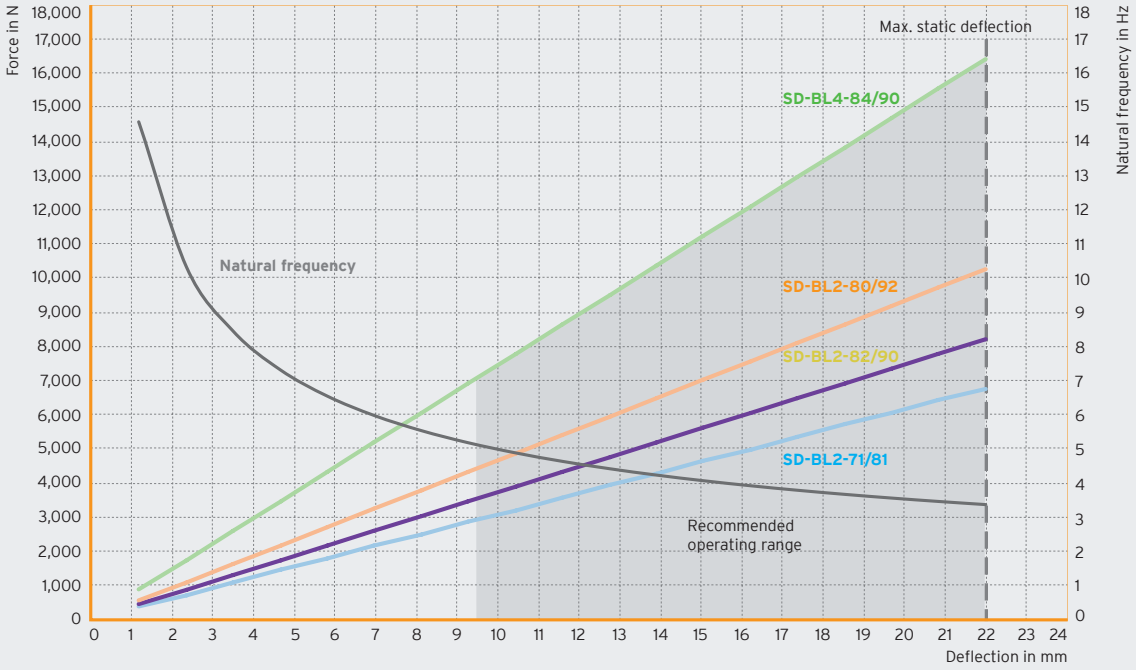

Isotop SD-BL 4, SD-BL 6 and SD-BL 9

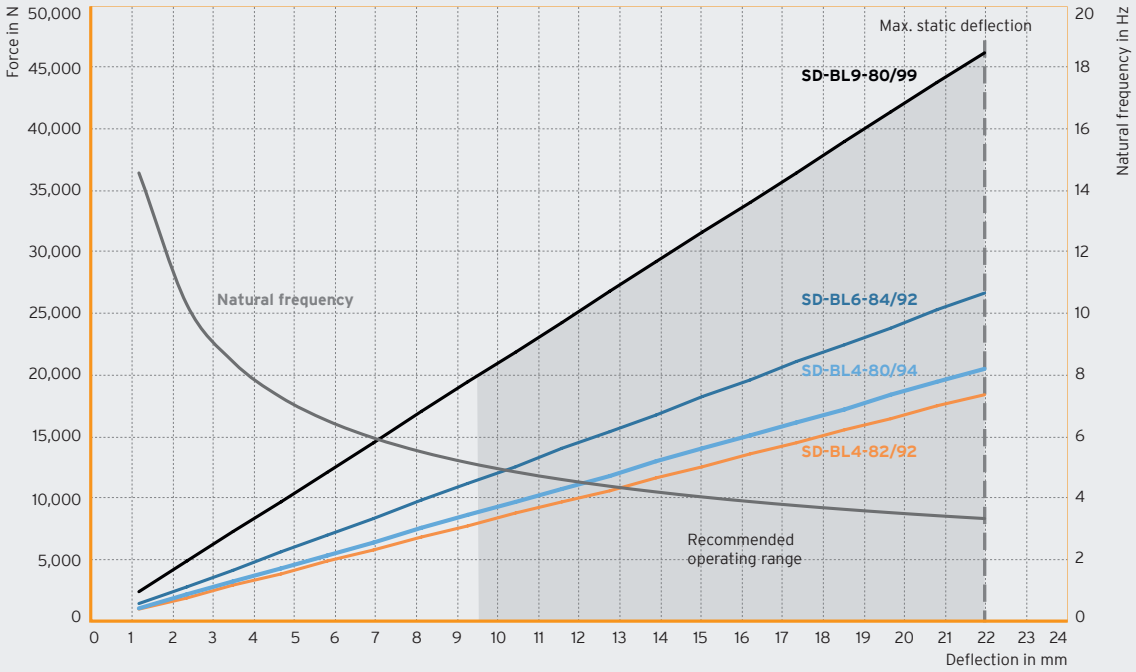

Isotop DMSN

Steel spring isolators for low installation heights, with integrated high-performance dampers

- Natural frequency from 5.3 Hz
- Low overall height of 57 mm
- Sylodamp® inside – ideal for machines with several start-stop cycles
- Cathodic dip-coating (CDC) for increased corrosion protection
- Secure connection between the plate and the spring thanks to special adhesive
- M 8 internal thread
- Simple load control thanks to open design
- Spring design conforms to DIN EN 13906-1

			Maximum load in kg	Maximum load in N	Natural frequency at maximum load	Packaging unit	Order number
DMSN spring element KTL	Isotop DMSN 3	KTL	11	108	9.5 Hz	50 pcs.	**42389**
	Isotop DMSN 4	KTL	16	158	7.8 Hz	50 pcs.	**42390**
	Isotop DMSN 5	KTL	33	324	8.1 Hz	50 pcs.	**42397**
	Isotop DMSN 6	KTL	45	441	7.0 Hz	50 pcs.	**42396**
	Isotop DMSN 7	KTL	63	618	6.2 Hz	50 pcs.	**42394**
	Isotop DMSN 8	KTL	100	981	5.3 Hz	50 pcs.	**42395**
Height adjustment for MSN/DMSN	Isotop NV 1–8 MSN	M 8	for DMSN 3 to 8			50 pcs.	**47322**

Isotop DMSN (unloaded)

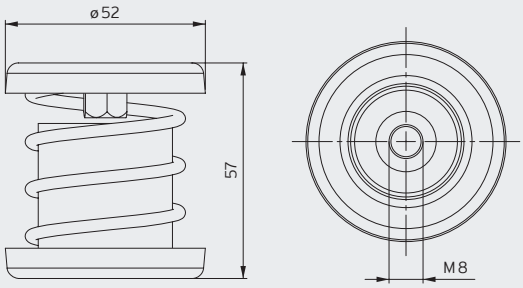

Isotop NV 1-8 MSN

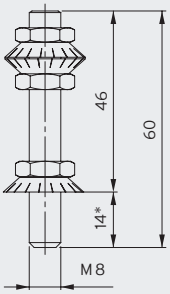

*Thread reach MSN/DMSN

Reciprocating compressor with Isotop DMSN

Monoblock heat pump with Isotop DMSN

Power generator

Isotop DMSN 3

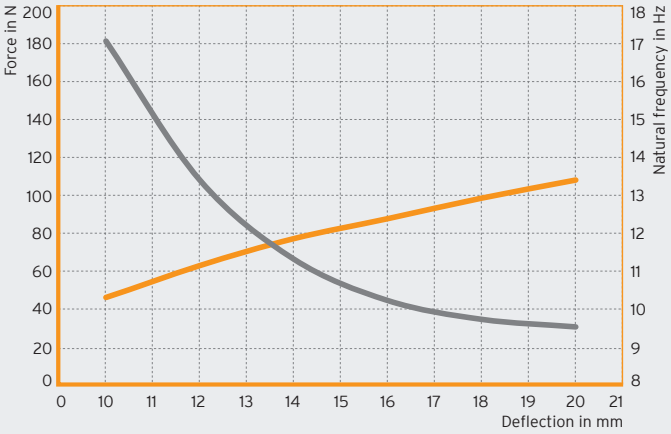

Isotop DMSN 4

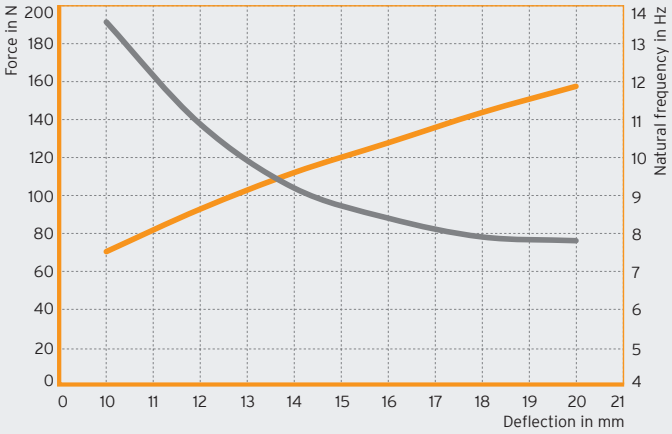

Isotop DMSN 5

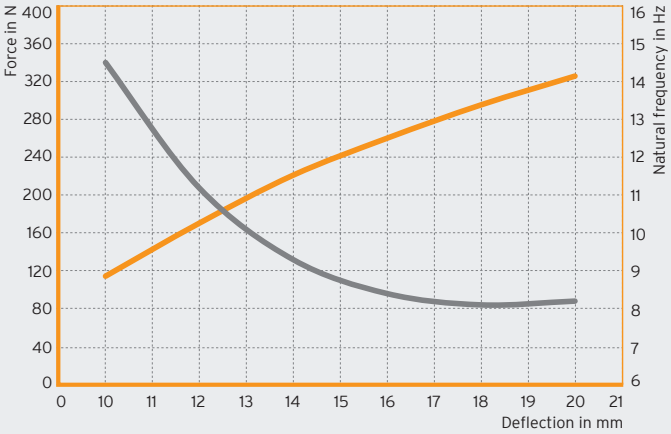

Isotop DMSN 6

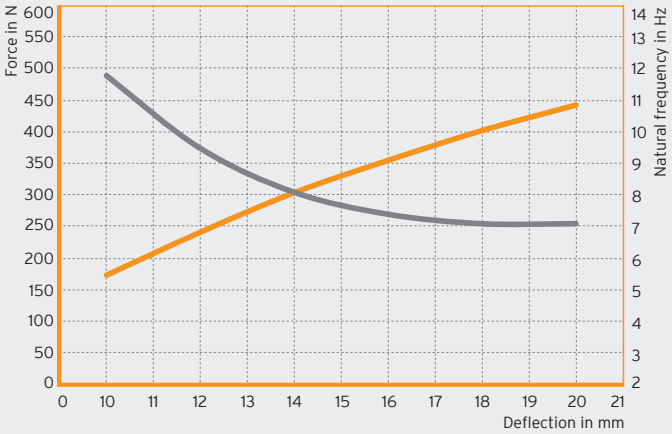

Isotop DMSN 7

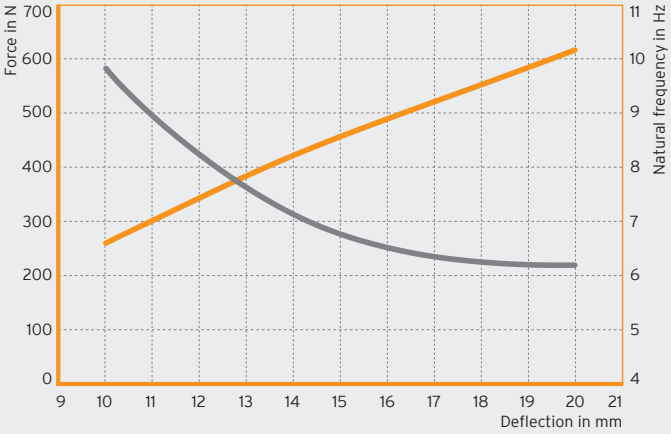

Isotop DMSN 8

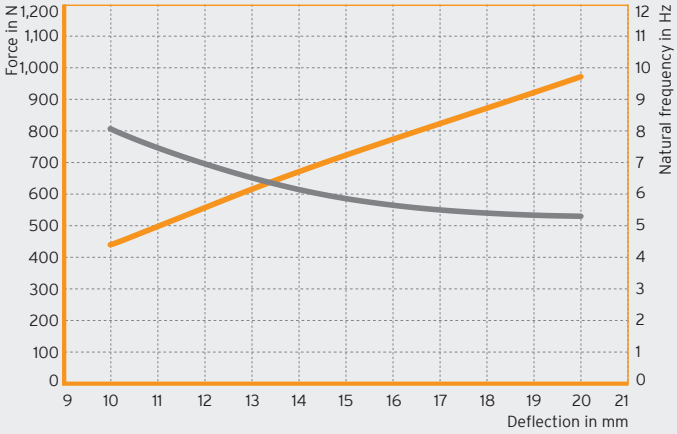

Force in N

Natural frequency in Hz

Isotop DMSN-BL

DMSN steel spring block element with high-performance damper for low installation heights and high loads

- Natural frequency from 5.3 Hz
- Low overall height of 75 mm
- High load capacity of up to 1,590 kg per element
- Sylodamp® inside – ideal for machines with several start-stop cycles
- 5 mm top plate and base plate fitted with 4 mm Sylomer® anti-slip plate
- CDC coating of springs and powder coating of pressure plates for outstanding corrosion protection
- Secure connection between the plate and the spring thanks to special adhesive
- Top plate with M10 thread
- Simple load control thanks to open design

		Maximum load in kg	Maximum load in N	Natural frequency at maximum load	Packaging unit	Order number
DMSN-BL 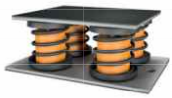	Isotop DMSN-BL4-62/72	215	2,109	6.6 Hz	4 pcs.	**47239**
	Isotop DMSN-BL4-70/84	395	3,875	5.3 Hz	4 pcs.	**47240**
	Isotop DMSN-BL6-72/84	520	5,101	5.5 Hz	50 pcs.	**OR**
	Isotop DMSN-BL9-74/85	750	7,358	5.6 Hz	50 pcs.	**OR**
	Isotop DMSN-BL9-70/89	895	8,780	5.3 Hz	50 pcs.	**OR**
	Isotop DMSN-BL16-712/804	1,150	11,282	5.9 Hz	50 pcs.	**OR**
	Isotop DMSN-BL16-700/816	1,590	15,598	5.3 Hz	50 pcs.	**OR**

Not held in stock. Delivery time on request (approx. 15 working days from the factory).
OR ... On request

Isotop DMSN-BL 4 (unloaded)

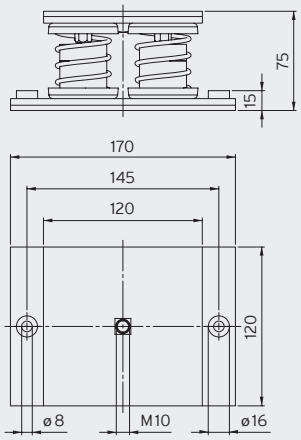

Isotop DMSN-BL 6 (unloaded)

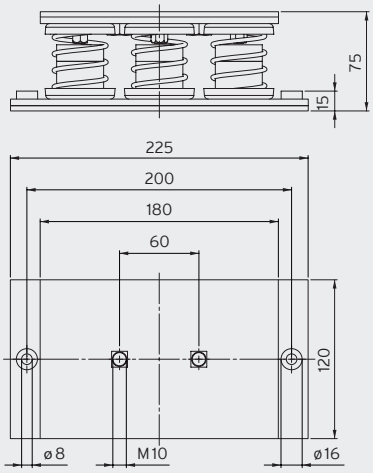

Isotop DMSN-BL 9 (unloaded)

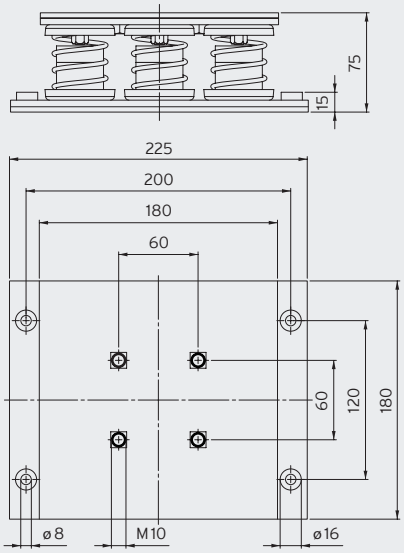

Isotop DMSN-BL 16 (unloaded)

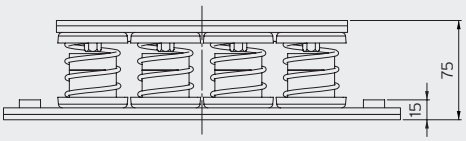

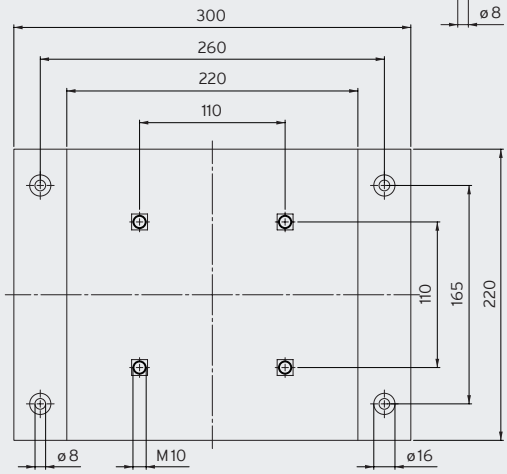

Customised block elements available on request

Base of a textile machine on Isotop DM-SN-BL (special version)

Small combined heat and power plant on Isotop DMSN-BL (special version)

Isotop DMSN-BL4-62/72

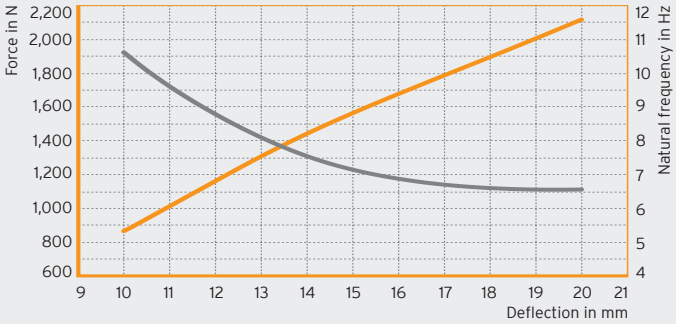

Isotop DMSN-BL4-70/84

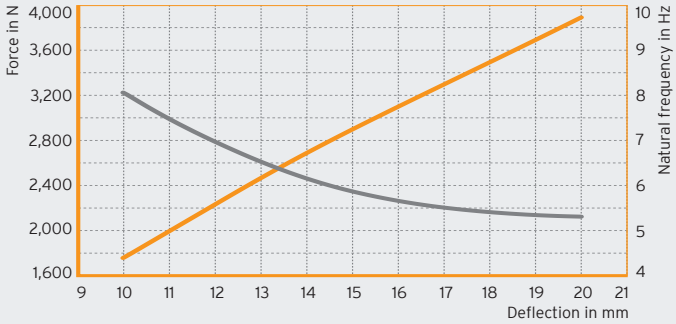

Isotop DMSN-BL6-72/84

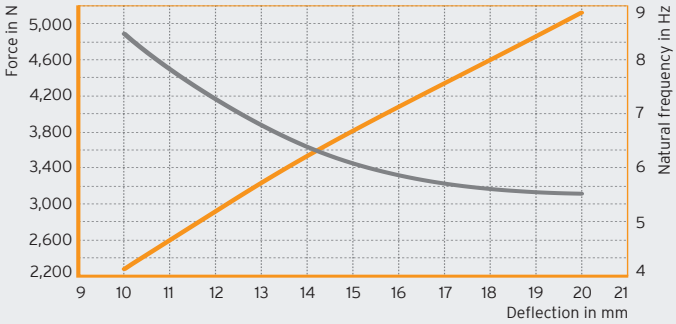

Isotop DMSN-BL9-74/85

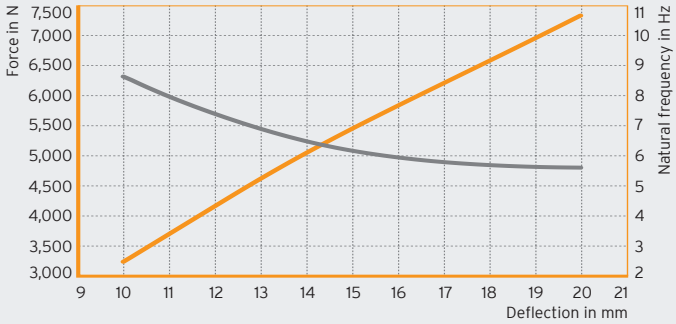

Isotop DMSN-BL9-70/89

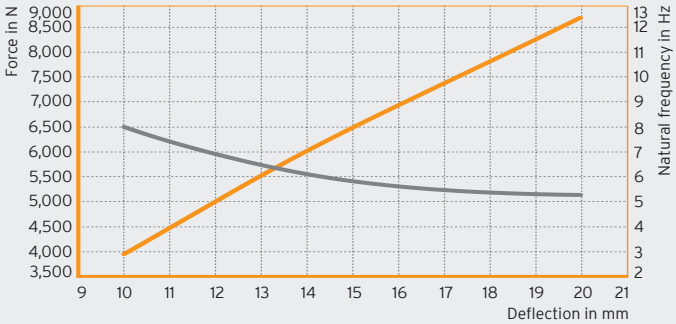

Isotop DMSN-BL16-712/804

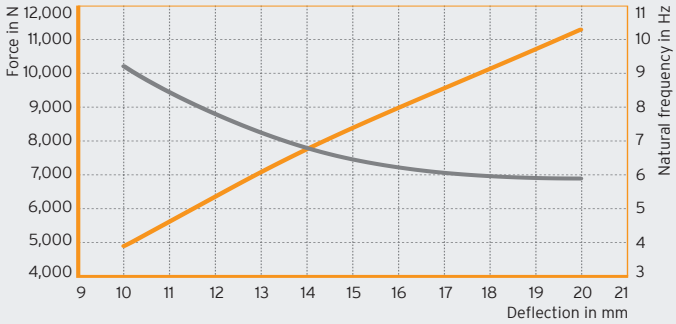

Isotop DMSN-BL16-700/816

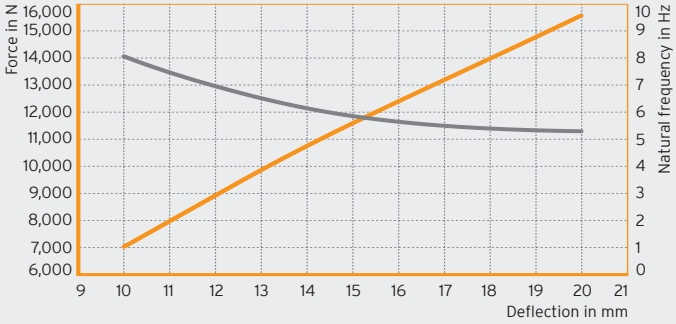

Force in N

Natural frequency in Hz

Isotop DSD

Steel spring isolators with integrated high-performance dampers

- Natural frequency from 4.2 Hz
- Sylodamp® inside – ideal for machines with several start-stop cycles
- Cathodic dip-coating (CDC) for increased corrosion protection
- Secure connection between the plate and the spring thanks to special adhesive
- M10 internal thread
- Suitable base plate and/or height adjustment available
- Base plate with damping element (FP/K) also isolates higher frequencies
- Simple load control thanks to open design
- Spring design conforms to DIN EN 13906-1

			Maximum load in kg	Maximum load in N	Natural frequency at maximum load	Packaging unit	Order number
DSD spring element KTL	Isotop DSD 1 KTL		24	235	5.6 Hz	50 pcs.	**39492**
	Isotop DSD 2 KTL		39	383	4.9 Hz	50 pcs.	**39493**
	Isotop DSD 3 KTL		57	559	4.8 Hz	50 pcs.	**39495**
	Isotop DSD 4 KTL		87	853	4.2 Hz	50 pcs.	**39496**
	Isotop DSD 5 KTL		140	1,373	4.8 Hz	50 pcs.	**39497**
	Isotop DSD 6 KTL		200	1,962	4.3 Hz	50 pcs.	**39157**
	Isotop DSD 7 KTL		365	3,581	5.2 Hz	50 pcs.	**39498**
	Isotop DSD 8 KTL		470	4,611	4.7 Hz	50 pcs.	**39499**
	Isotop DSD 9 KTL		650	6,377	4.6 Hz	50 pcs.	**39500**
Base plate FP/K with damping element for SD/DSD	Isotop FP/K 1–9 KTL		for DSD 1 to 9		including screws[1]	50 pcs.	**39158**
Base plate FP for SD/DSD	Isotop FP 1–9 KTL		for DSD 1 to 9		without screws	50 pcs.	**39537**
Height adjustment for SD/DSD	Isotop NV 1–9	M10	for DSD 1 to 9			50 pcs.	**47321**

[1] M10 connecting screws between base plate and spring

Isotop SD (unloaded)

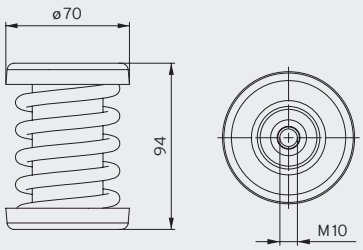

Isotop FP/K

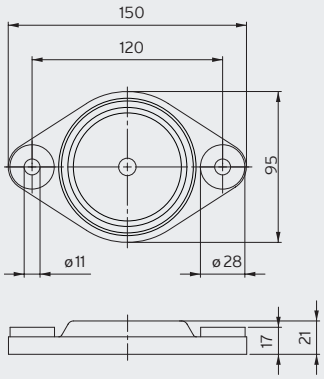

Isotop FP

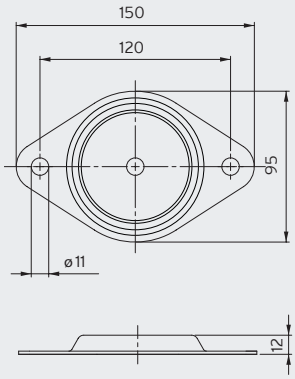

Isotop NV 1-9

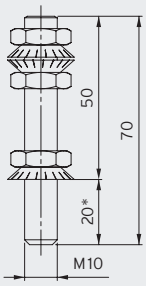

*Thread reach SD/DSD

Small combined heat and power plant

Roof-mounted recooler

Isotop DSD 1

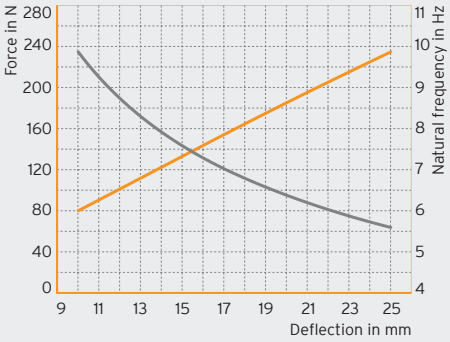

Isotop DSD 2

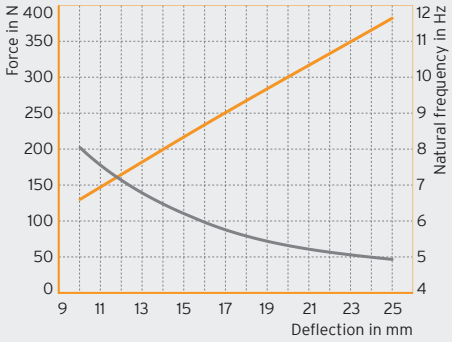

Isotop DSD 3

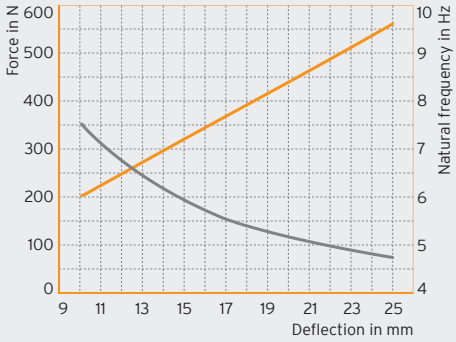

Isotop DSD 4

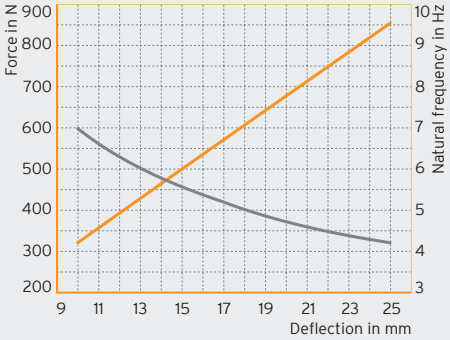

Isotop DSD 5

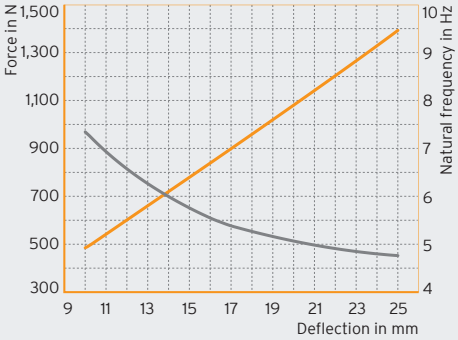

Isotop DSD 6

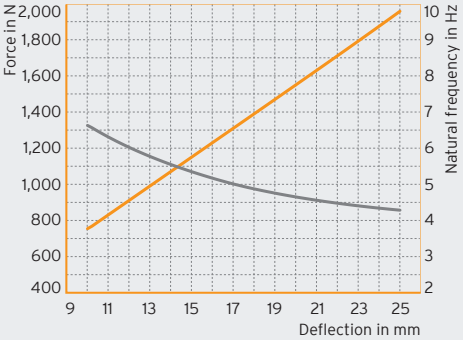

Isotop DSD 7

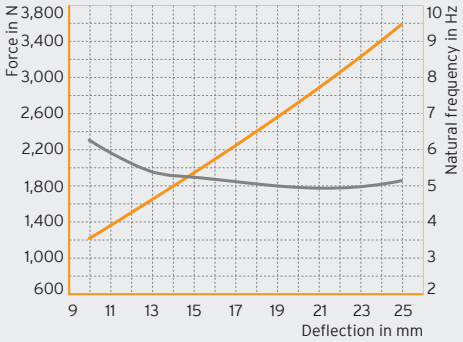

Isotop DSD 8

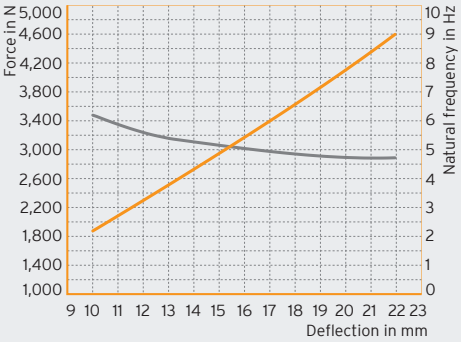

Isotop DSD 9

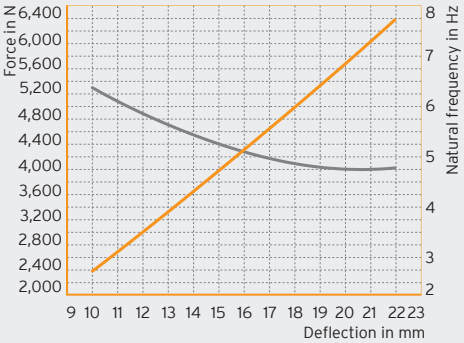

Force in N

Natural frequency in Hz

Isotop DSD-BL

DSD steel spring block element with high-performance damper

- Natural frequency from 4.3 Hz
- High load capacity of up to 5,850 kg per element
- Sylodamp® inside – ideal for machines with several start-stop cycles
- CDC coating of springs and powder coating of pressure plates for outstanding corrosion protection
- 6 mm top plate and base plate fitted with 4 mm Sylomer® anti-slip plate
- Secure connection between the plate and the spring thanks to special adhesive
- Top plate with M12 thread
- Simple load control thanks to open design

DSD-BL

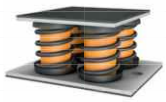

	Maximum load in kg	Maximum load in N	Natural frequency at maximum load	Packaging unit	Order number
Isotop DSD-BL2-62/70	400	3,924	4.3 Hz	4 pcs.	**47257**
Isotop DSD-BL2-72/80	730	7,161	5.2 Hz	4 pcs.	**47258**
Isotop DSD-BL2-82/90	940	9,221	4.7 Hz	4 pcs.	**47264**
Isotop DSD-BL2-81/91	1,120	10,987	4.7 Hz	4 pcs.	**47262**
Isotop DSD-BL2-80/92	1,300	12,753	4.6 Hz	4 pcs.	**47260**
Isotop DSD-BL4-72/82	1,560	15,304	4.8 Hz	4 pcs.	**47271**
Isotop DSD-BL4-84/90	1,880	18,443	4.7 Hz	4 pcs.	**47275**
Isotop DSD-BL4-82/92	2,240	21,974	4.7 Hz	4 pcs.	**47274**
Isotop DSD-BL4-80/94	2,600	25,506	4.6 Hz	4 pcs.	**47272**
Isotop DSD-BL6-86/90	2,820	27,664	4.7 Hz	50 pcs.	**OR**
Isotop DSD-BL6-80/96	3,900	38,259	4.6 Hz	50 pcs.	**OR**
Isotop DSD-BL9-80/99	5,850	57,389	4.6 Hz	50 pcs.	**OR**

Not held in stock. Delivery time on request (approx. 15 working days from the factory).
OR ... On request

Isotop DSD-BL 2 (unloaded)

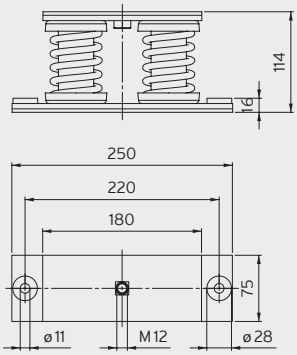

Isotop DSD-BL 4 (unloaded)

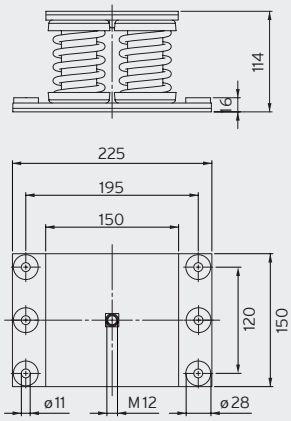

Isotop DSD-BL 6 (unloaded)

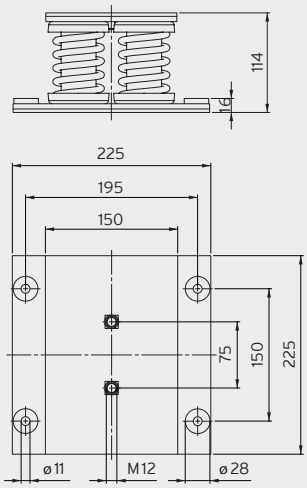

Isotop DSD-BL 9 (unloaded)

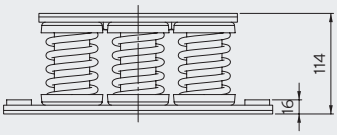

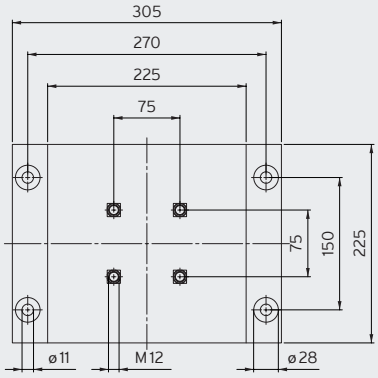

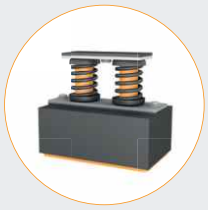

Isotop DSD-BL2 and DSD-BL4 optionally available with spacer base

Details on page 28

Customised block elements available on request

On-roof installation of an HVAC system with relatively high wind loads

Large combined heat and power plant with several start-stop cycles

Isotop DSD-BL 2

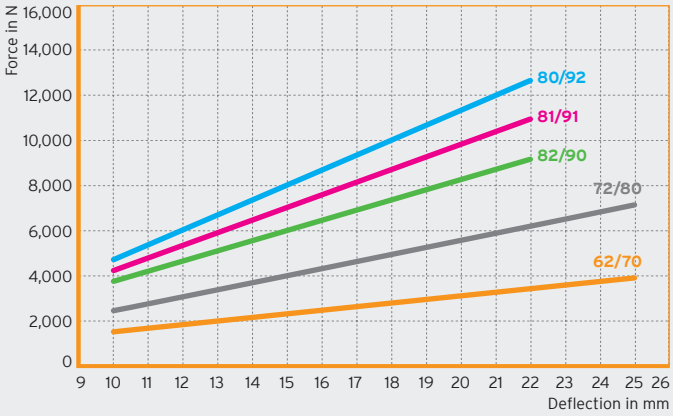

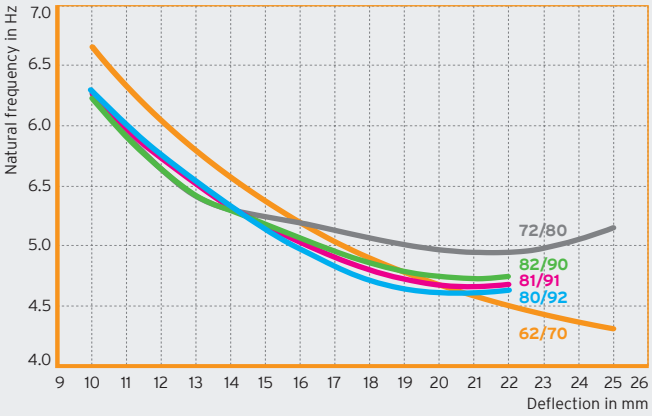

Isotop DSD-BL 4

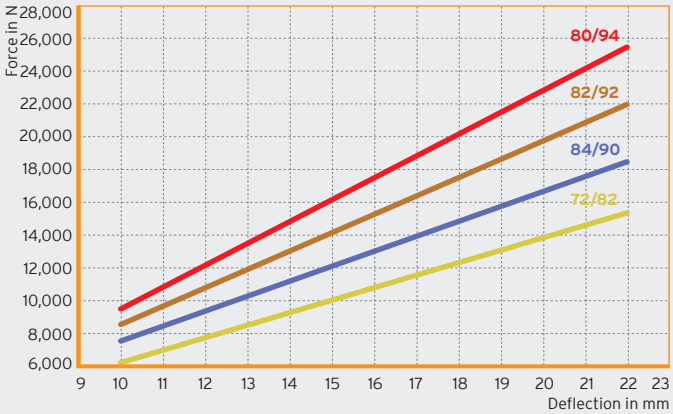

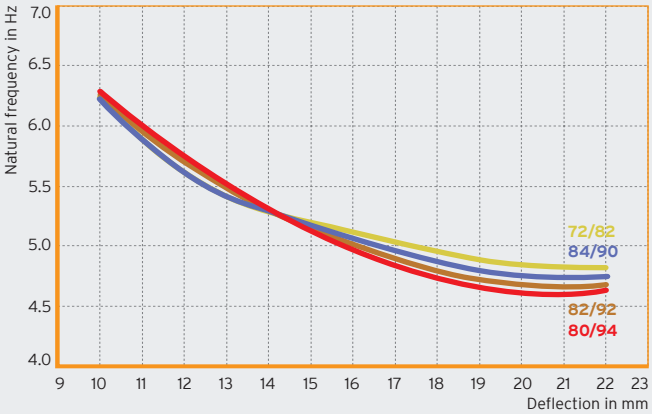

Isotop DSD-BL 6 and DSD-BL 9

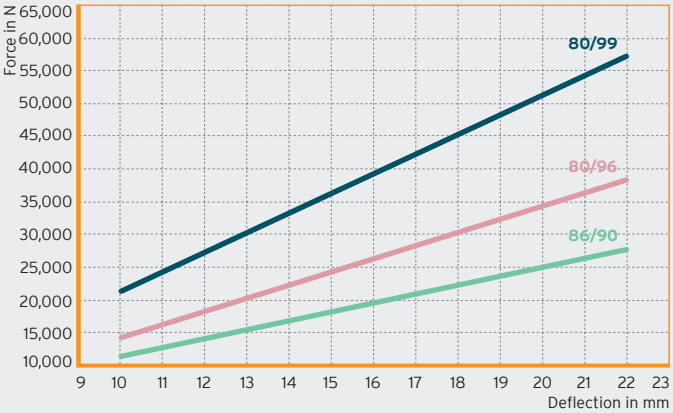

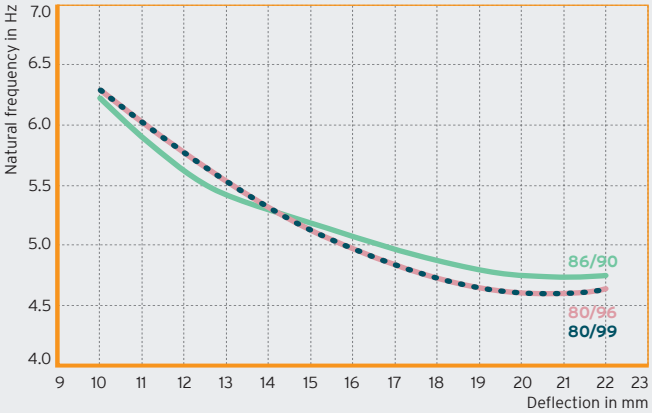

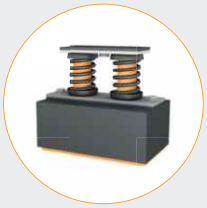

Isotop DT

Spacer base with high chemical resistance

- High resistance to chemicals such as glycol thanks to polyethylene
- Includes anti-slip plate made from Sylodyn®
- Polyethylene spacer base
- Can be combined with Isotop SD-BL 2 and 4 as well as Isotop DSD-BL 2 and 4 (not included in the scope of supply)
- Screws for connecting the block elements are included in the scope of supply

		Maximum load in kg	Maximum load in N	Natural frequency at maximum load	Packaging unit	Order number
DT	Isotop DT	-	-	-	4 pcs.	**47169**

Not held in stock. Delivery time on request (approx. 15 working days from the factory).

Isotop DT (unloaded)

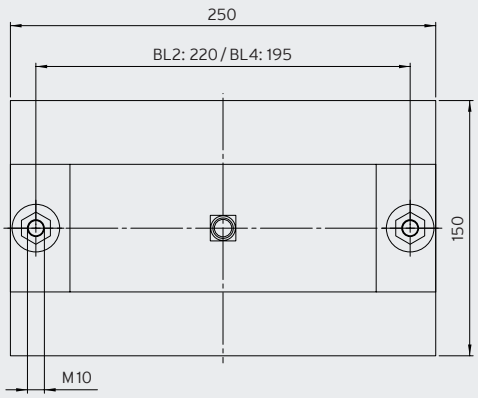

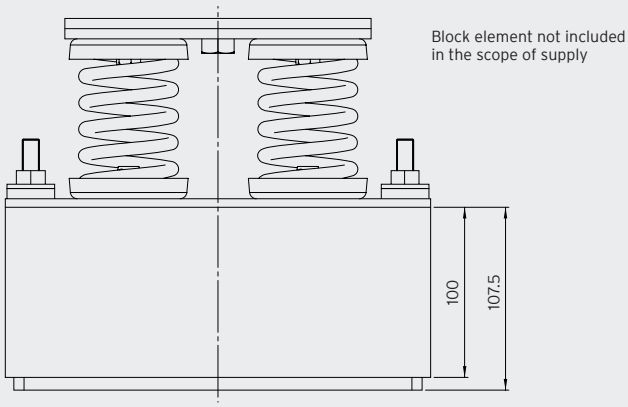

Isotop DT pre-mounted on device frame

Unit installation with pre-mounted Isotop DT

Unit installation in the drip tray

Air conditioning unit with Isotop DT and Isotop DSD-BL2
(not included in the scope of supply)

Isotop MSN-DAMP

Vibration damper with metal caps and threaded fastening

- Natural frequency from 7.4 Hz
- Low overall height of 45 mm (T/T version)
- 37.5 mm Sylomer® inside
- Cathodic dip-coated (CDC) metal caps for increased corrosion protection
- Secure connection between the plate and the polyurethane damper thanks to special adhesive
- M 8 internal thread and/or M 8 stud bolts for easy screw-fixing
- Available in three different attachment options

		Maximum load in kg	Maximum load in N	Natural frequency at maximum load	Packaging unit	Order number
MSN-DAMP T/T	Isotop MSN-DAMP-70 T/T	6	59	8.6 Hz	OR	**OR**
	Isotop MSN-DAMP-110 T/T	10	98	9.2 Hz	50 pcs.	**39501**
	Isotop MSN-DAMP-170 T/T	19	187	7.9 Hz	50 pcs.	**39502**
	Isotop MSN-DAMP-280 T/T	25	246	7.4 Hz	OR	**OR**
	Isotop MSN-DAMP-350 T/T	35	343	8.1 Hz	50 pcs.	**39503**
MSN-DAMP B/T	Isotop MSN-DAMP-70 B/T	6	59	8.6 Hz	OR	**OR**
	Isotop MSN-DAMP-110 B/T	10	98	9.2 Hz	50 pcs.	**41715**
	Isotop MSN-DAMP-170 B/T	19	187	7.9 Hz	50 pcs.	**41716**
	Isotop MSN-DAMP-280 B/T	25	246	7.4 Hz	OR	**OR**
	Isotop MSN-DAMP-350 B/T	35	343	8.1 Hz	50 pcs.	**41717**
MSN-DAMP B/B	Isotop MSN-DAMP-70 B/B	6	59	8.6 Hz	OR	**OR**
	Isotop MSN-DAMP-110 B/B	10	98	9.2 Hz	50 pcs.	**41720**
	Isotop MSN-DAMP-170 B/B	19	187	7.9 Hz	50 pcs.	**41721**
	Isotop MSN-DAMP-280 B/B	25	246	7.4 Hz	OR	**OR**
	Isotop MSN-DAMP-350 B/B	35	343	8.1 Hz	50 pcs.	**41722**

OR ... On request

Isotop MSN-DAMP T/T (unloaded)

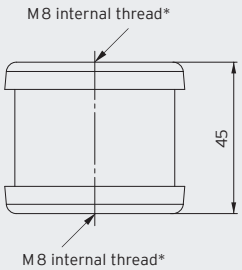

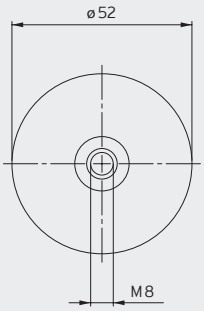

Thread reach into the internal thread max. approx. 15 mm

Isotop MSN-DAMP B/T (unloaded)

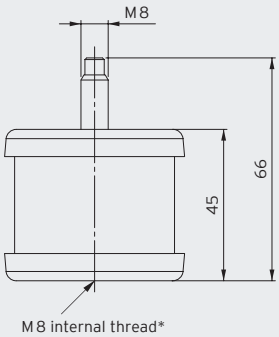

Isotop MSN-DAMP B/B (unloaded)

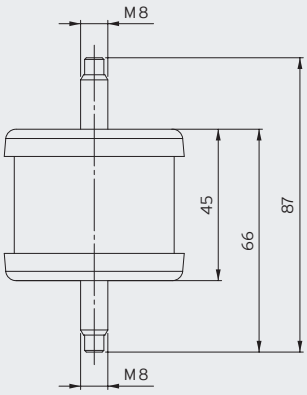

Bearing of a reciprocating compressor with Isotop MSN-DAMP

Bearing of a compressor assembly on an internal frame

Compressor bearing concept with Sylomer® CGR and Isotop MSN-DAMP

Isotop MSN-DAMP 70

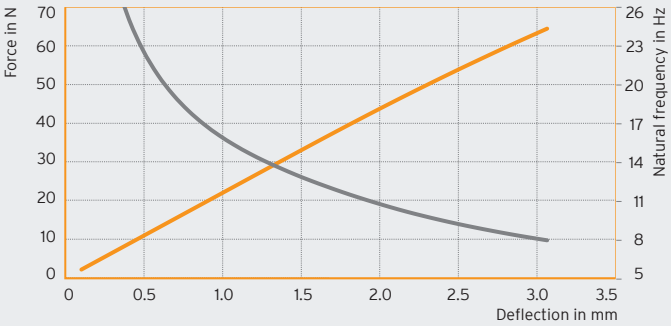

Isotop MSN-DAMP 110

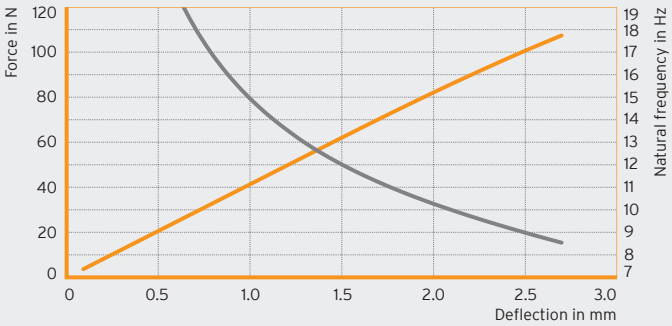

Isotop MSN-DAMP 170

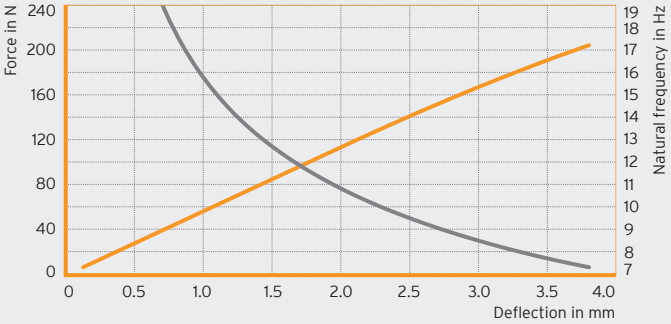

Isotop MSN-DAMP 280

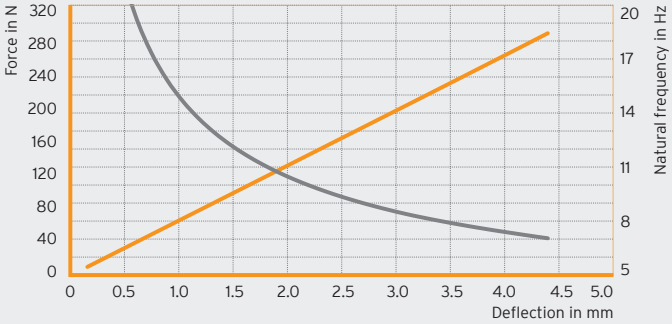

Isotop MSN-DAMP 350

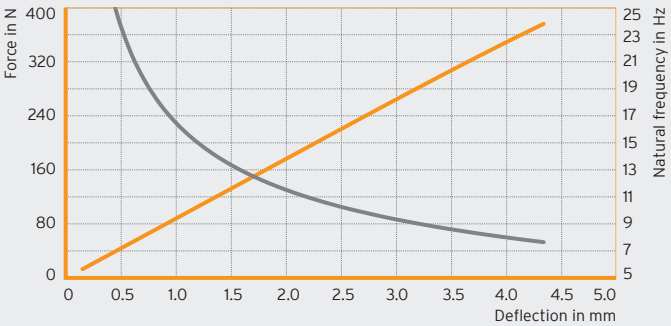

Force in N

Natural frequency in Hz

Isotop Compact

Vibration damper for low installation heights, with diverse attachment options

- Natural frequency from 9.9 Hz
- Very low overall height of 28 mm (T/T version)
- Load capacity of up to 95 kg per element
- 25 mm Sylomer® or Sylodyn® inside
- High level of corrosion protection
- Secure connection between the plate and the polyurethane damper thanks to special adhesive
- M 8 internal thread and/or M 8 stud bolts for easy screw-fixing
- Available in four different attachment options
- Can also be used as an anti-slip machine mounting (B/- version)

		Maximum load in kg	Maximum load in N	Natural frequency at maximum load	Packaging unit	Order number
Compact T/T 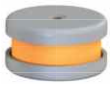	Isotop Compact-4 T/T	4	41	12.1 Hz	50 pcs.	**39504**
	Isotop Compact-9 T/T	8	79	11.6Hz	50 pcs.	**39505**
	Isotop Compact-15 T/T	15	147	11.5 Hz	50 pcs.	**39506**
	Isotop Compact-20 T/T	27	264	10.7 Hz	50 pcs.	**39507**
	Isotop Compact-40 T/T	37	363	10.0 Hz	50 pcs.	**38884**
	Isotop Compact-50 T/T	50	491	10.9 Hz	50 pcs.	**39508**
	Isotop Compact-70 T/T	63	619	9.9 Hz	50 pcs.	**39509**
	Isotop Compact-100 T/T	95	931	10.5 Hz	50 pcs.	**39511**
Compact B/B 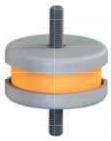	Isotop Compact-4 B/B	4	41	12.1 Hz	50 pcs.	**39521**
	Isotop Compact-9 B/B	9	93	10.3 Hz	50 pcs.	**39522**
	Isotop Compact-15 B/B	15	147	11.5 Hz	50 pcs.	**39523**
	Isotop Compact-20 B/B	27	264	10.7 Hz	50 pcs.	**39524**
	Isotop Compact-40 B/B	40	392	10.1 Hz	50 pcs.	**39525**
	Isotop Compact-50 B/B	50	491	10.9 Hz	50 pcs.	**39526**
	Isotop Compact-70 B/B	78	765	10.3 Hz	50 pcs.	**39527**
	Isotop Compact-100 B/B	95	931	10.5 Hz	50 pcs.	**39529**
Compact B/T 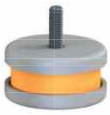	Isotop Compact-4 B/T	4	41	12.1 Hz	50 pcs.	**39512**
	Isotop Compact-9 B/T	9	93	10.3 Hz	50 pcs.	**39513**
	Isotop Compact-15 B/T	15	147	11.5 Hz	50 pcs.	**39514**
	Isotop Compact-20 B/T	27	264	10.7 Hz	50 pcs.	**39515**
	Isotop Compact-40 B/T	40	392	10.1 Hz	50 pcs.	**39516**
	Isotop Compact-50 B/T	50	491	10.9 Hz	50 pcs.	**39517**
	Isotop Compact-70 B/T	78	765	10.3 Hz	50 pcs.	**39518**
	Isotop Compact-100 B/T	95	931	10.5 Hz	50 pcs.	**39520**
Compact B/- 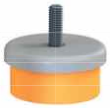	Isotop Compact-4 B/-	4	41	12.1 Hz	50 pcs.	**41135**
	Isotop Compact-9 B/-	9	93	10.3 Hz	50 pcs.	**41136**
	Isotop Compact-15 B/-	15	147	11.5 Hz	50 pcs.	**41137**
	Isotop Compact-20 B/-	27	264	10.7 Hz	50 pcs.	**41138**
	Isotop Compact-40 B/-	40	392	10.1 Hz	50 pcs.	**41139**
	Isotop Compact-50 B/-	50	491	10.9 Hz	50 pcs.	**41140**
	Isotop Compact-70 B/-	78	765	10.3 Hz	50 pcs.	**41141**
	Isotop Compact-100 B/-	95	931	10.5 Hz	50 pcs.	**41143**

Compact -70 and -100: Not held in stock. Delivery time on request.

Isotop Compact T/T (unloaded)

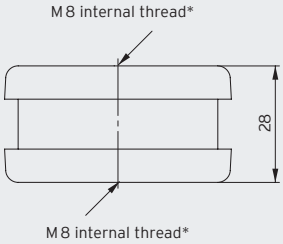

Isotop Compact B/T (unloaded)

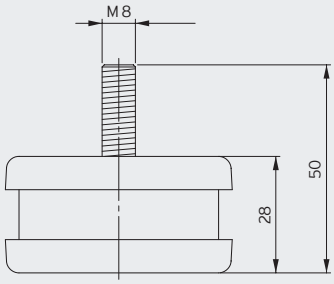

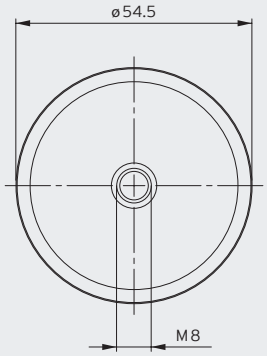

* Thread reach for internal thread max. 7 mm

Isotop Compact B/B (unloaded)

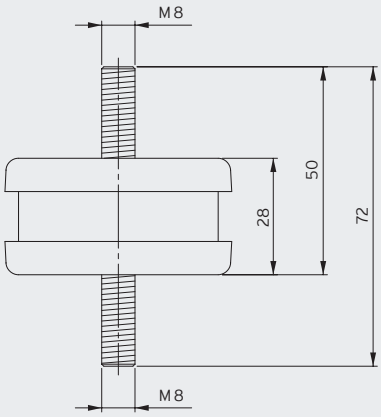

Isotop Compact B/- (unloaded)

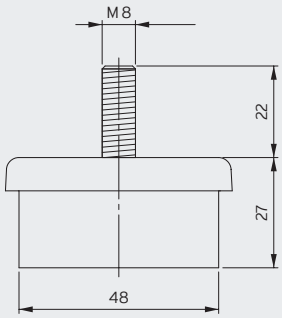

Isotop Compact

Isotop Compact 4

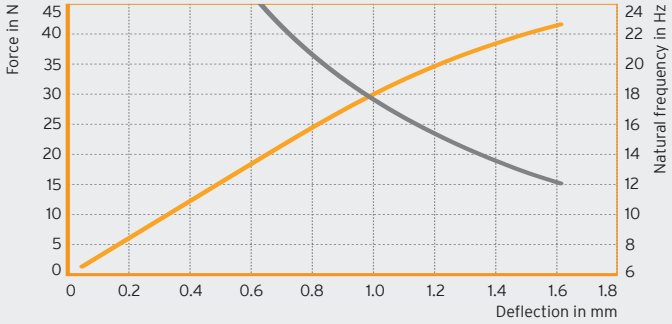

Isotop Compact 9

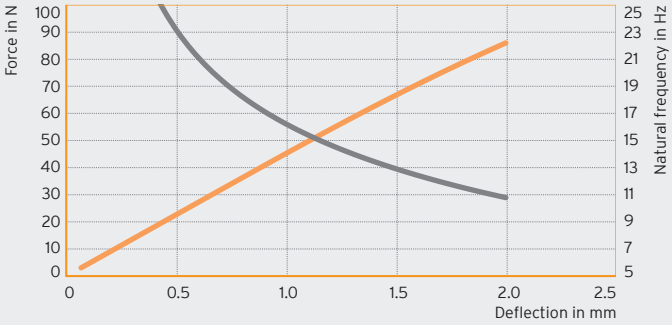

Isotop Compact 15

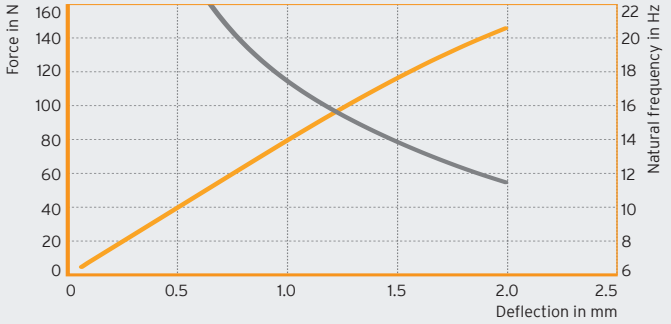

Isotop Compact 20

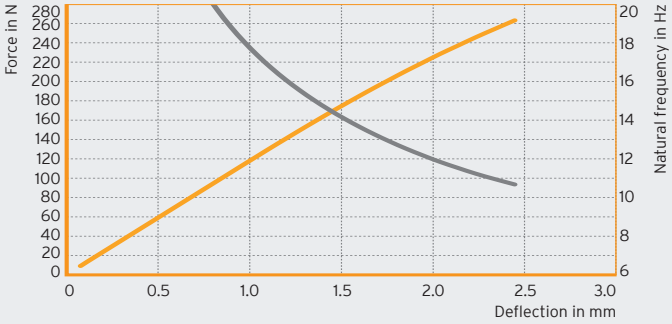

Isotop Compact 40

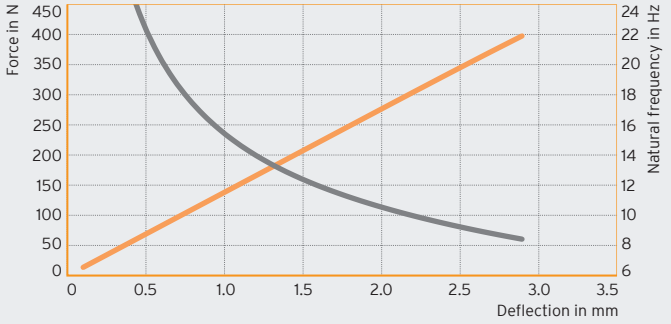

Isotop Compact 50

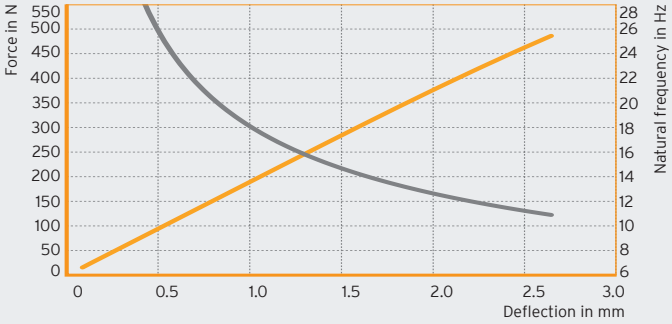

Isotop Compact 70

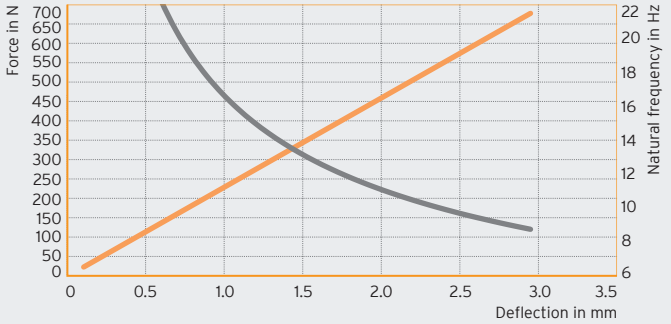

Isotop Compact 100

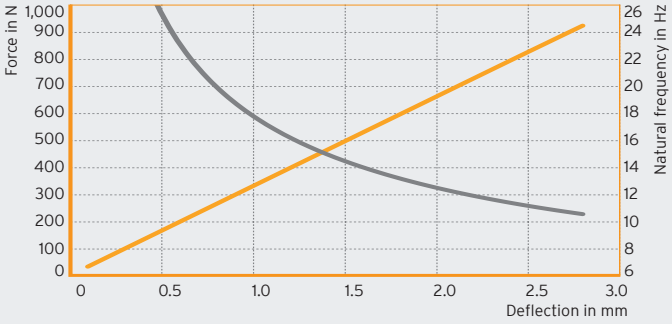

Force in N

Natural frequency in Hz

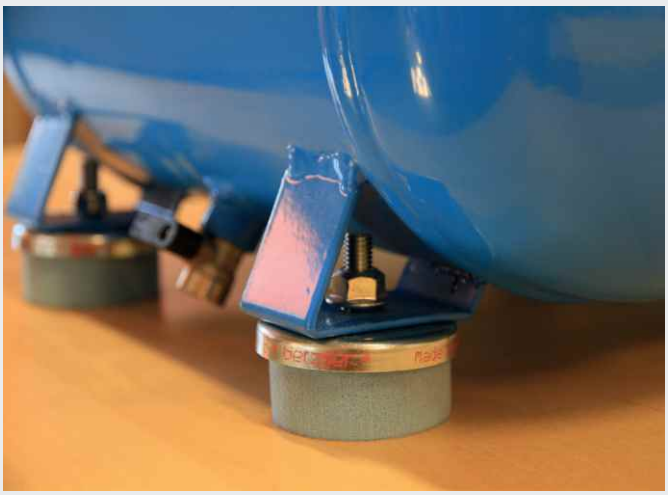

Small air compressor on Isotop Compact B/-

Heat pump bearing with Isotop Compact

External air conditioning unit on wall bracket

Bearing of a reciprocating compressor with Isotop Compact

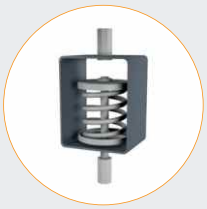

Isotop MSN/Z, MSN/Z-LC and SD/Z

Tension elements as ceiling hanger for building services equipment

- Natural frequency from 3.2 Hz
- Load capacities of up to 420 kg per spring (SD/Z)
- Secure connection between the plate and the spring thanks to special adhesive
- High level of corrosion protection
- M 8 (MSN/Z and MSN/Z-LC) or M10 (SD/Z) internal thread
- Simple load control thanks to open design

		Maximum load in kg	Maximum load in N	Natural frequency at maximum load	Packaging unit	Order number
MSN/Z	Isotop MSN/Z 1	3	29	3.5 Hz	20 pcs.	**39538**
	Isotop MSN/Z 2	5	49	3.5 Hz	20 pcs.	**38850**
	Isotop MSN/Z 3	9	88	3.5 Hz	20 pcs.	**38851**
	Isotop MSN/Z 4	14	137	3.5 Hz	20 pcs.	**38643**
	Isotop MSN/Z 5	23	226	3.5 Hz	20 pcs.	**38644**
	Isotop MSN/Z 6	35	343	3.5 Hz	20 pcs.	**38852**
	Isotop MSN/Z 7	53	519	3.5 Hz	20 pcs.	**38853**
	Isotop MSN/Z 8	90	883	3.5 Hz	20 pcs.	**39539**
MSN/Z-LC	Isotop MSN/Z-LC 1	3	29	3.5 Hz	100 pcs.	**39540**
	Isotop MSN/Z-LC 2	5	49	3.5 Hz	100 pcs.	**39541**
	Isotop MSN/Z-LC 3	9	88	3.5 Hz	100 pcs.	**39542**
	Isotop MSN/Z-LC 4	14	137	3.5 Hz	100 pcs.	**39543**
	Isotop MSN/Z-LC 5	23	226	3.5 Hz	100 pcs.	**39544**
	Isotop MSN/Z-LC 6	35	343	3.5 Hz	100 pcs.	**38548**
	Isotop MSN/Z-LC 7	53	519	3.5 Hz	100 pcs.	**39545**
	Isotop MSN/Z-LC 8	90	883	3.5 Hz	100 pcs.	**39546**
SD/Z	Isotop SD/Z 1	20	196	3.2 Hz	20 pcs.	**39547**
	Isotop SD/Z 2	33	324	3.2 Hz	20 pcs.	**39548**
	Isotop SD/Z 3	52	510	3.2 Hz	20 pcs.	**39549**
	Isotop SD/Z 4	82	804	3.2 Hz	20 pcs.	**39550**
	Isotop SD/Z 5	123	1,206	3.2 Hz	20 pcs.	**39551**
	Isotop SD/Z 6	195	1,913	3.2 Hz	20 pcs.	**39552**
	Isotop SD/Z 7	310	3,041	3.2 Hz	20 pcs.	**39553**
	Isotop SD/Z 8	420	4,120	3.2 Hz	OR	**OR**

MSN/Z-LC: Not held in stock. Delivery time on request (approx. 15 working days from the factory)
OR ... On request

The Isotop SD/Z and MSN/Z ceiling hangers are only suitable for use as pipe suspension or for fans in technical building services. This means for water, waste water, water heating systems and ventilation duct construction.

For pipes in industrial production processes that are subject to the requirements of EN 13480 or similar national standards regarding pressure equipment, these ceiling hangers are not suitable, as the maximum deflection is limited (see graph).

Pipework suspension with Isotop SD/Z

Decoupled pipes with Isotop SD/Z

Ceiling hanger Isotop MSN/Z-LC

MSN/Z (unloaded)

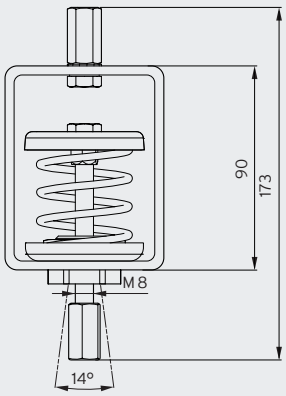

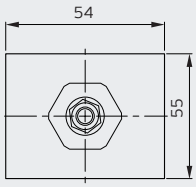

MSN/Z-LC (unloaded)

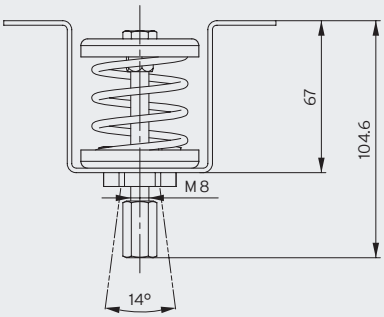

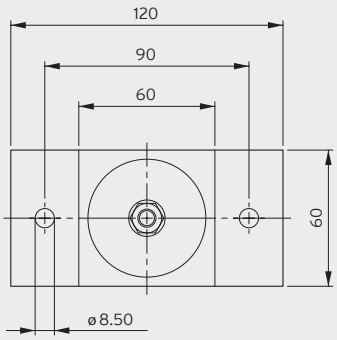

SD/Z (unloaded)

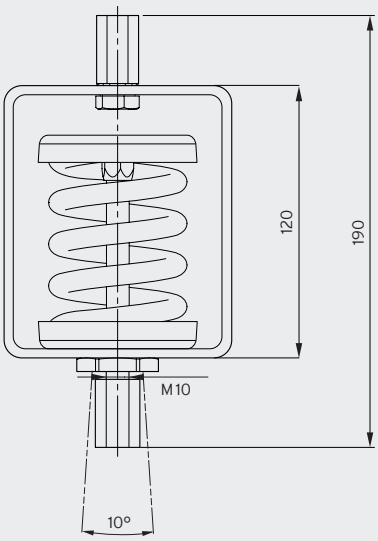

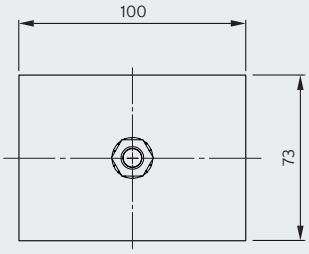

Isotop DZE

Pressure-tension element with high-performance damper

- Natural frequency from 7 Hz
- Resistant to compression and tension
- Reduces high amplitudes
- Can be used from an installation height of 49 mm (DZE Mini)
- Sylodyn® and Sylodamp® inside
- Load capacity of more than 4 t per element (DZE-BL)
- Stainless steel housing and continuous stainless steel piping for highest levels of corrosion protection
- Rapid installation thanks to pre-assembled elements

			Maximum load in kg	Maximum load in N	Natural frequency at maximum load	Packaging unit	Order number
DZE Mini	Isotop DZE Mini NB SP1		8	79	11.3 Hz	10 pcs.	**43799**
	Isotop DZE Mini NC SP1		17	167	10.7 Hz	10 pcs.	**43800**
	Isotop DZE Mini ND SP3		38	373	9.6 Hz	10 pcs.	**43801**
	Isotop DZE Mini NE SP3		60	589	9.9 Hz	10 pcs.	**43802**
	Isotop DZE Mini NF SP3		100	981	9.8 Hz	10 pcs.	**43803**
	Isotop DZE Mini HRB 3 SP3		230	2,256	11.6 Hz	10 pcs.	**43804**
DZE	Isotop DZE-1-NB-SP	Single layer	26	256	10.9 Hz	10 pcs.	**39614**
	Isotop DZE-1-NC-SP	Single layer	53	520	9.5Hz	10 pcs.	**39615**
	Isotop DZE-1-ND-SP	Single layer	115	1,129	9.8 Hz	10 pcs.	**39616**
	Isotop DZE-1-NE-SP	Single layer	200	1,962	9.9 Hz	10 pcs.	**39617**
	Isotop DZE-1-HLL-SP5	Single layer	800	7,848	12,0 Hz	10 pcs.	**39618**
	Isotop DZE-1-HLH-SP5	Single layer	1,030	10,104	11.5 Hz	10 pcs.	**39619**
	Isotop DZE-2-NB-SP	Double layer	24	236	7.5 Hz	10 pcs.	**39442**
	Isotop DZE-2-NC-SP	Double layer	46	452	7.0 Hz	10 pcs.	**39620**
	Isotop DZE-2-ND-SP	Double layer	97	952	7.1 Hz	10 pcs.	**39621**
	Isotop DZE-2-NE-SP	Double layer	166	1.629	7.0 Hz	10 pcs.	**39622**
	Isotop DZE-2-HLL-SP5	Double layer	630	6,180	8.1 Hz	10 pcs.	**39623**
	Isotop DZE-2-HLH-SP5	Double layer	820	8,044	7.7 Hz	10 pcs.	**39624**
DZE-BL	Isotop DZE-1-BL2-HLH-SP5	Single layer	2,065	20,258	11.5 Hz	10 pcs.	**42595**
	Isotop DZE-1-BL4-HLH-SP5	Single layer	4,135	40,564	11.5 Hz	10 pcs.	**42597**
	Isotop DZE-2-BL2-HLH-SP5	Double layer	1,635	16,039	7.7 Hz	10 pcs.	**42598**
	Isotop DZE-2-BL4-HLH-SP5	Double layer	3,270	32,079	7.7 Hz	10 pcs.	**42599**

DZE-BL: Not held in stock. Delivery time on request (approx. 15 working days from the factory)

Tensile forces

Type	Maximum tensile force
Isotop DZE Mini NB and NC	0.3 kN
Isotop DZE Mini ND to HRB	1.1 kN
Isotop DZE-1 NB to NE	2.7 kN
Isotop DZE-1 HLL and HLH	4.0 kN
Isotop DZE-2 NB to NE	2.7 kN
Isotop DZE-2 HLL and HLH	4.0 kN
Isotop DZE-x-BL2-HLH	8.0 kN
Isotop DZE-x-BL4-HLH	16.0 kN

Note: Tensile forces correspond to the impact area of application of Sylodamp® (brief dynamic loads) according to the data sheet. The mechanical strength of the metal components is higher.

Recooler with Isotop DZE versus high wind loads

Bearing of a reciprocating compressor with Isotop DZE Mini

Pump with Isotop DZE to compensate for high dynamic operating forces

Isotop DZE-Mini (unloaded)

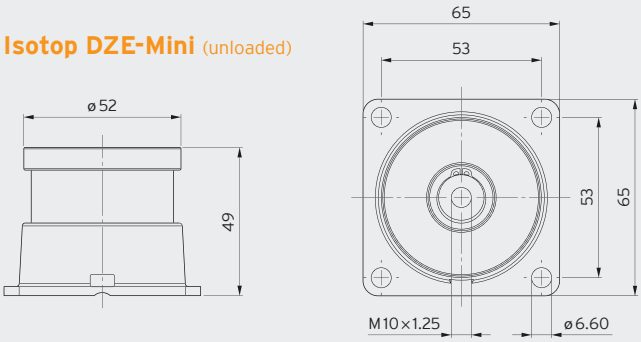

Please note: a 1.25 mm fine-pitch thread is required to make the connection

Isotop DZE-2 (unloaded)

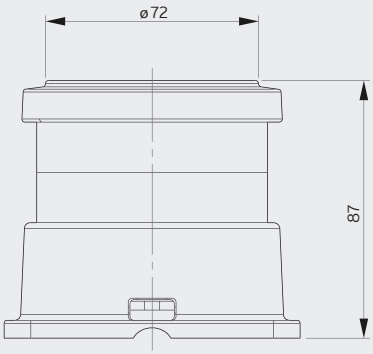

Isotop DZE-1 (unloaded)

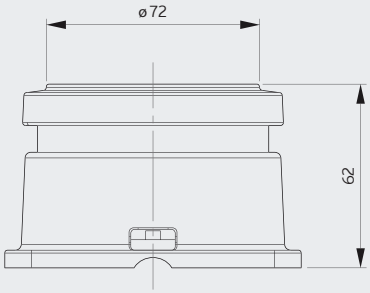

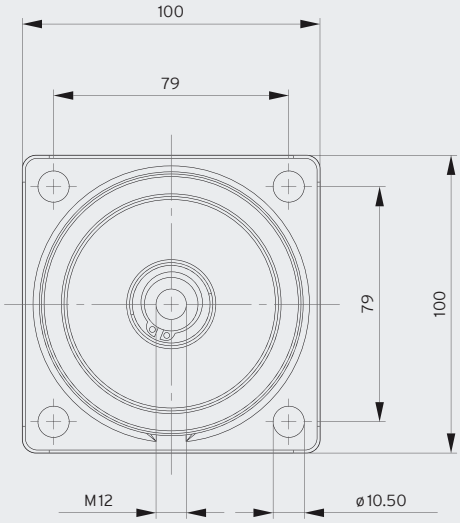

Isotop DZE-x-BL 2 (unloaded)

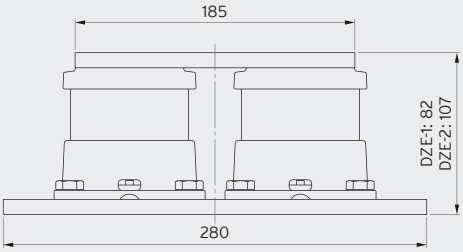

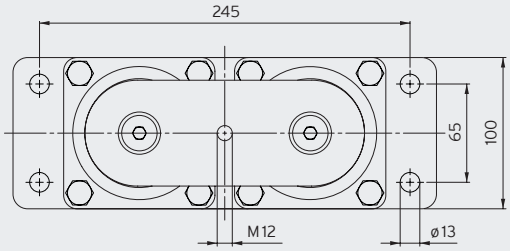

Isotop DZE-x-BL 4 (unloaded)

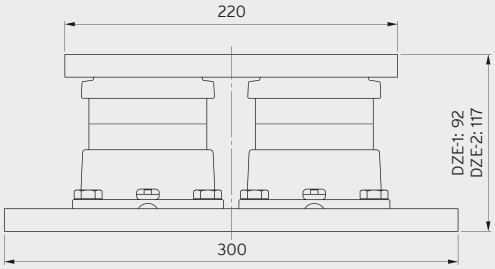

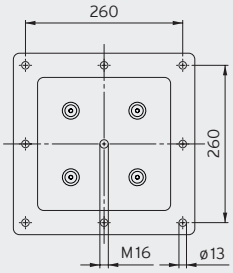

Customised block elements available on request

Isotop DZE

Isotop DZE Mini

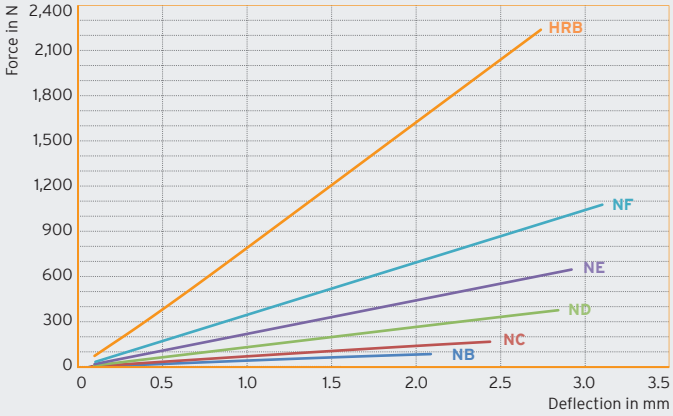

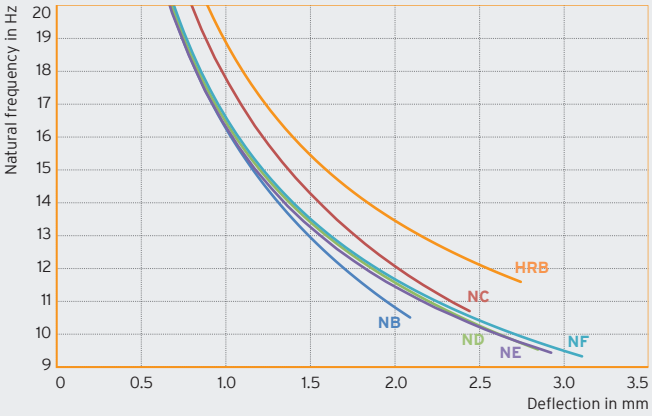

Isotop DZE-1

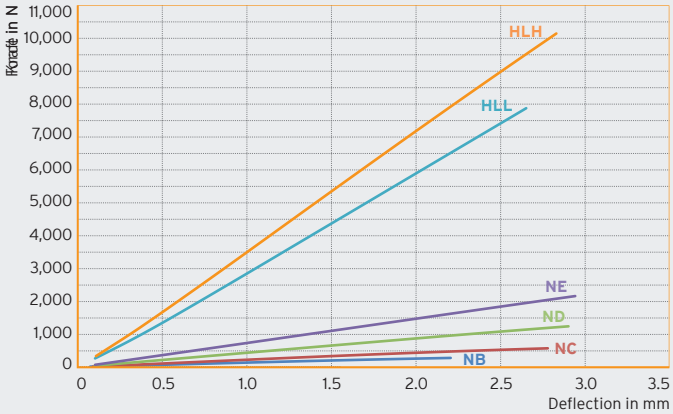

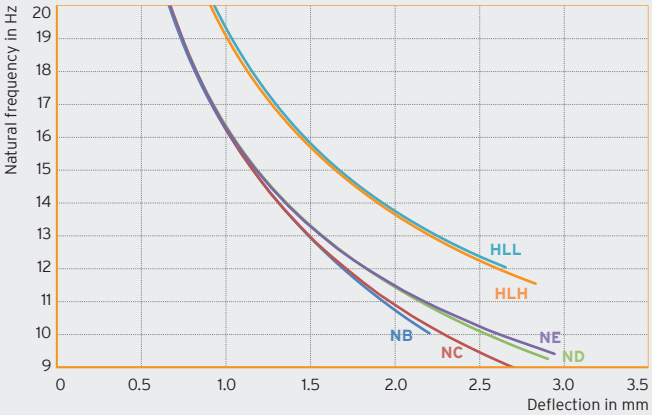

Isotop DZE-2

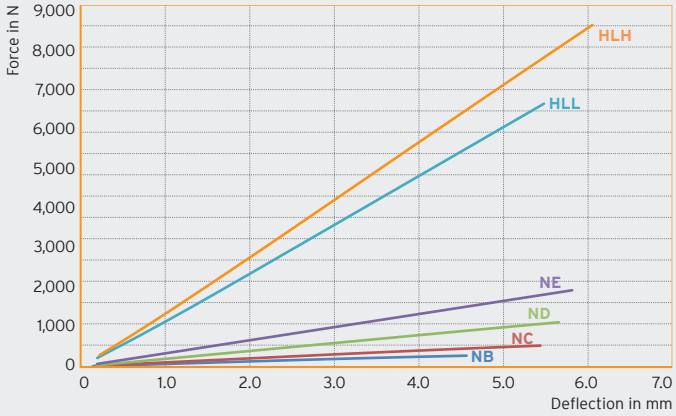

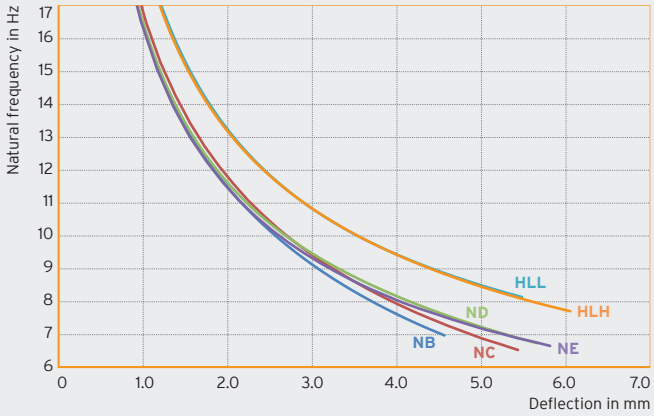

Isotop DZE-x-BL

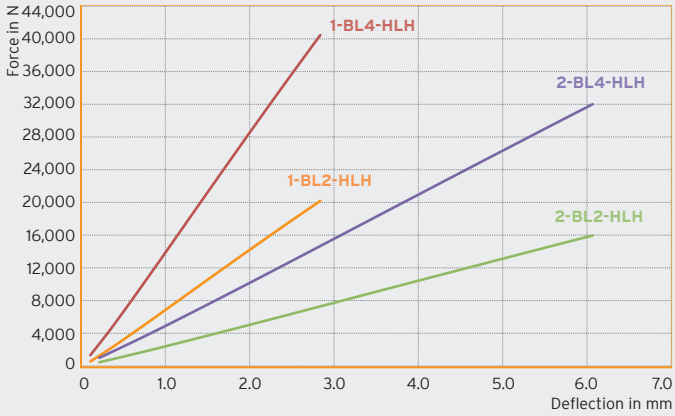

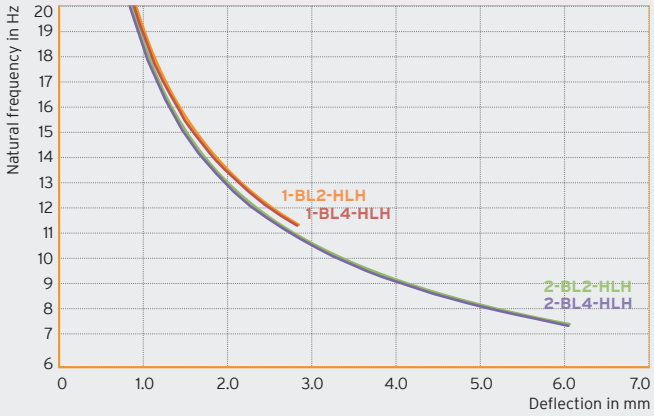

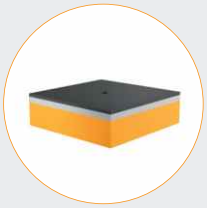

Isotop SE pro

Sandwich element with high-end vibration isolation

- Natural frequency from 7.5 Hz
- Top plate fitted with 4 mm Sylomer® anti-slip plate
- 10 mm hot dip galvanised steel plate for pressure distribution
- Insulating layer made from 37.5 mm Sylomer® or Sylodyn®
- M12 internal thread for easy screw-fixing
- Suitable for different frame widths
- Quick and easy to install

			Maximum load in kg	Maximum load in N	Natural frequency at maximum load	Packaging unit	Order number
SE pro	Isotop SE pro 9-1	Single layer	90	883	9.6 Hz	12 pcs.	**47527**
	Isotop SE pro 14-1	Single layer	148	1,452	8.5 Hz	12 pcs.	**46528**
	Isotop SE pro 28-1	Single layer	290	2,845	7.5 Hz	12 pcs.	**46529**
	Isotop SE pro 67-1	Single layer	630	6,181	7.9 Hz	12 pcs.	**46530**
	Isotop SE pro 133-1	Single layer	1,150	11,282	8.0 Hz	12 pcs.	**46532**
	Isotop SE pro 225-1	Single layer	2,050	20,111	7.8 Hz	12 pcs.	**46533**

Isotop SE pro (unloaded)

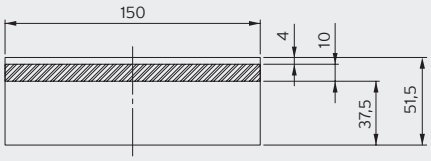

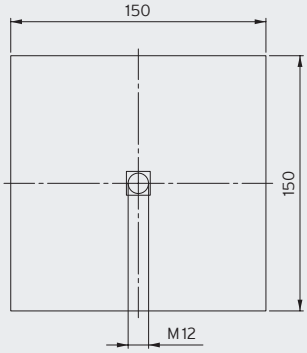

Pre-mounted base plate available on request

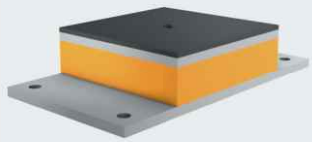

Isotop SE pro with base plate (unloaded)

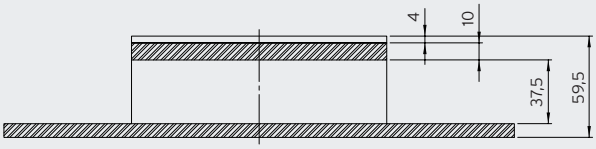

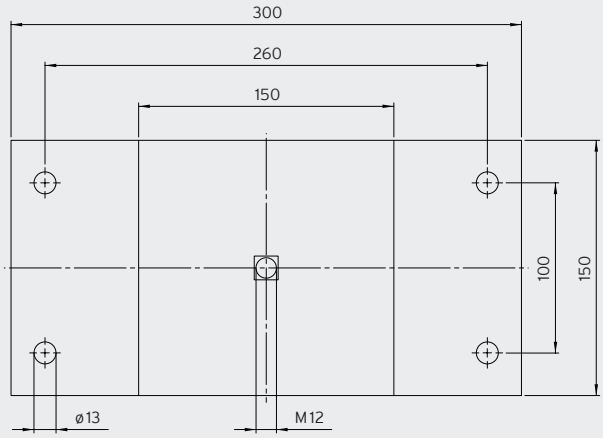

Isotop SE pro

Air conditioning unit on Isotop SE pro

Force in N
Natural frequency in Hz

Isotop SE pro 9-1

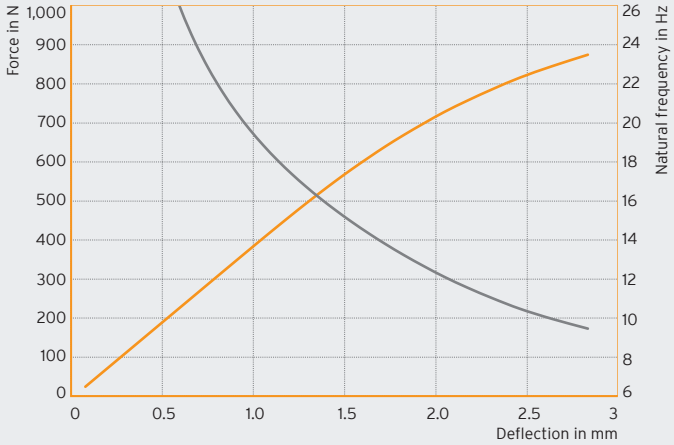

Isotop SE pro 14-1

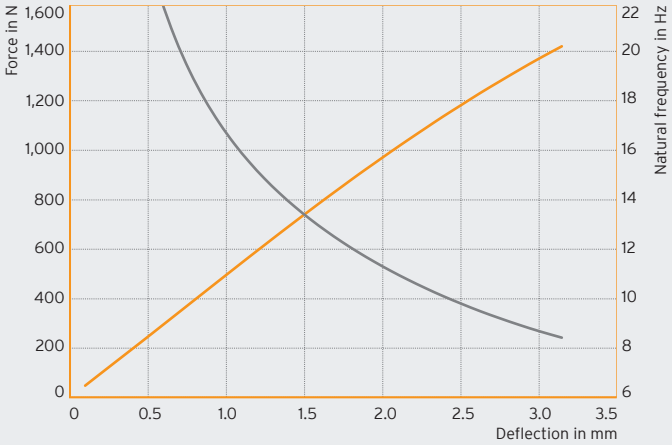

Isotop SE pro 28-1

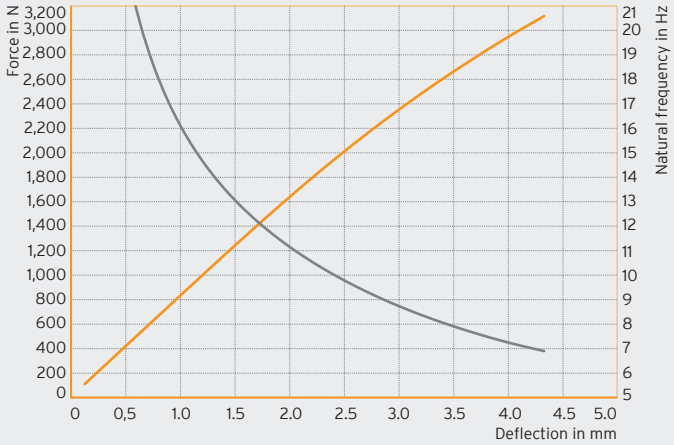

Isotop SE pro 67-1

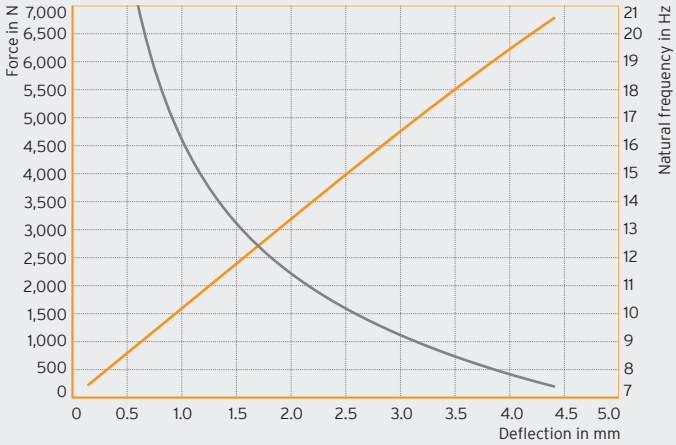

Isotop SE pro 133-1

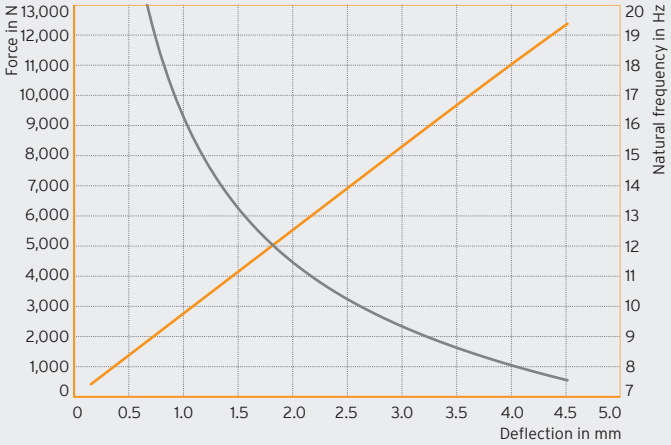

Isotop SE pro 225-1

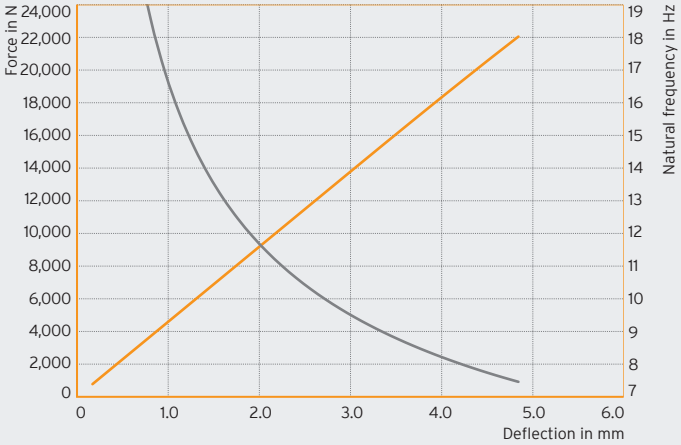

Isotop SE light

Sandwich element for universal use

- Natural frequency from 10.8 Hz
- 5 mm hot dip galvanised steel plate for pressure distribution with 3 mm anti-slip plate
- Insulating layer made from 25 mm Sylomer®
- Connection to the device by means of friction (without screw-fixing)
- Suitable for different frame widths
- Quick and easy to install

			Maximum load in kg	Maximum load in N	Natural frequency at maximum load	Packaging unit	Order number
SE light	Isotop SE light 6-1	Single layer	63	618	12.7 Hz	4 pcs.	**45949**
	Isotop SE light 12-1	Single layer	123	1,206	11.7 Hz	4 pcs.	**45950**
	Isotop SE light 24-1	Single layer	240	2,354	11.8 Hz	4 pcs.	**45951**
	Isotop SE light 47-1	Single layer	470	4,610	10.8 Hz	4 pcs.	**45952**
	Isotop SE light 93-1	Single layer	930	9,123	11.0 Hz	4 pcs.	**45953**

Isotop SE light (unloaded)

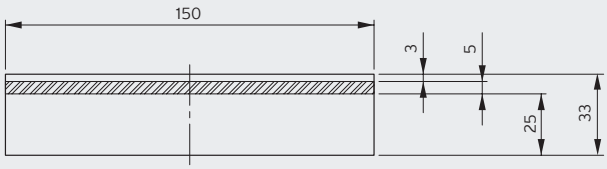

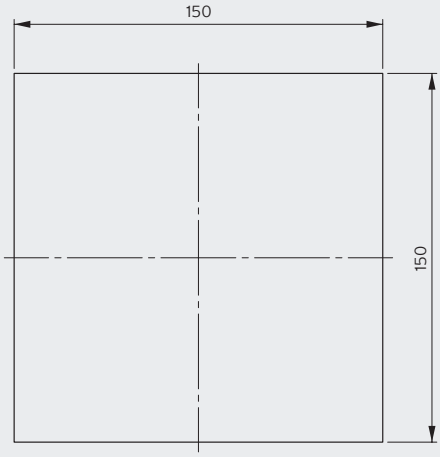

Isotop SE light

Air conditioning unit on Isotop SE light

Isotop SE light 6-1

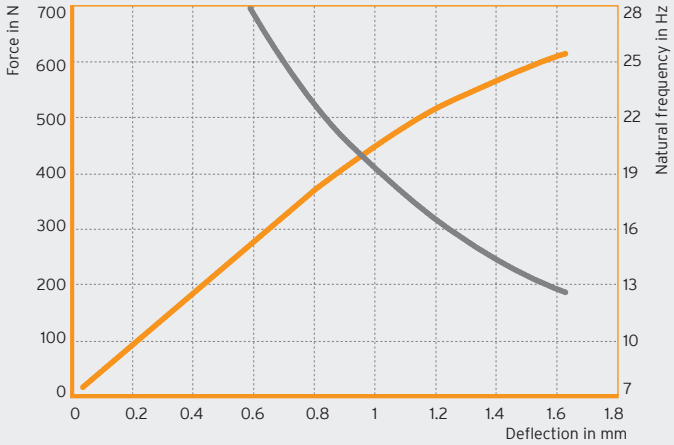

Isotop SE light 12-1

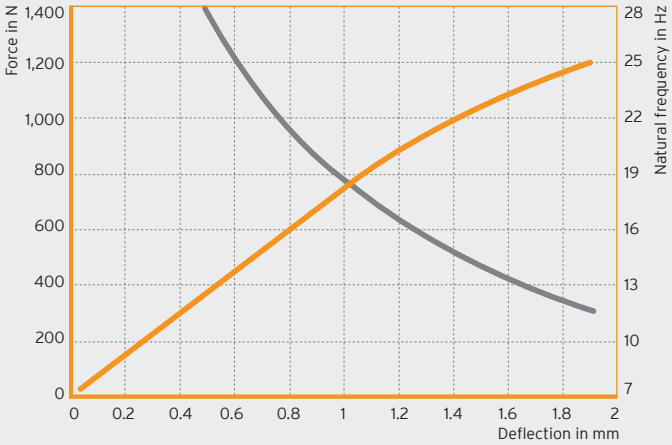

Isotop SE light 24-1

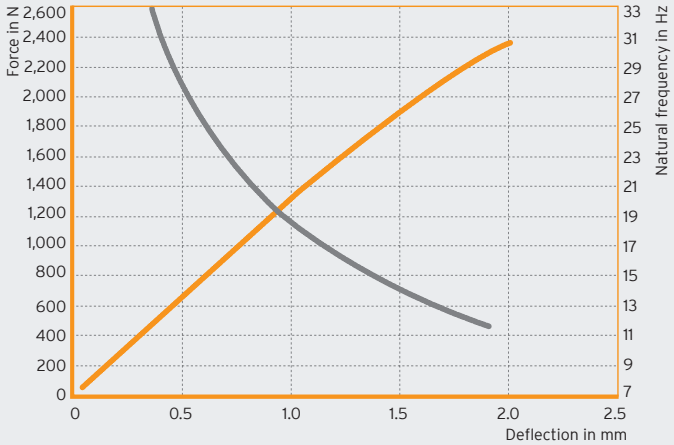

Isotop SE light 47-1

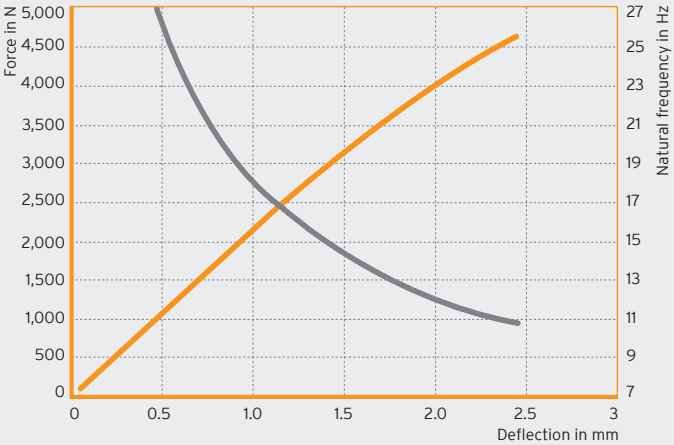

Isotop SE light 93-1

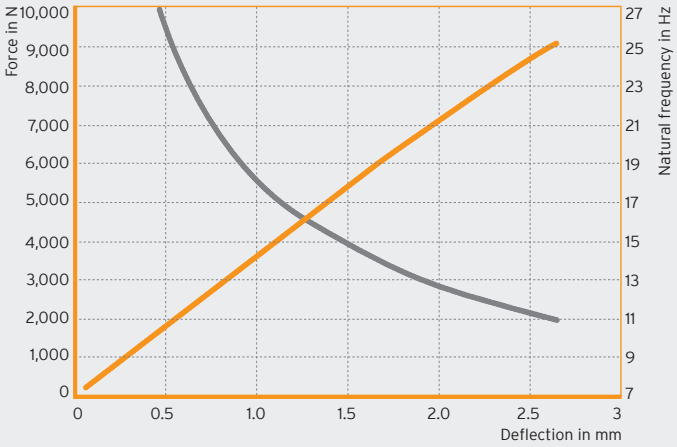

Force in N

Natural frequency in Hz

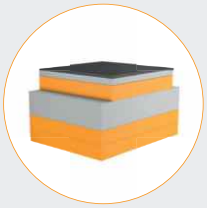

Isotop SE-DE and SE-DE Elevator

Sandwich element with double-elastic bearing

- Natural frequency from 5.7 Hz
- Sylomer® or Sylodyn® inside
- Category EL-3 according to DIN 8989 (VDI 2566)
- Top plate fitted with 4 mm Sylomer® anti-slip plate
- 10 mm hot dip galvanised steel plate for pressure distribution
- 60 mm thick, heavy settling mass
- M12 internal thread for easy screw-fixing
- Quick and easy to install

		Maximum load in kg	Maximum load in N	Natural frequency at maximum load	Packaging unit	Order number
SE-DE 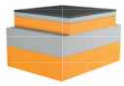	Isotop SE-DE 10	105	1,030	6.6 Hz	4 pcs.	**47270**
	Isotop SE-DE 13	142	1,393	7.0 Hz	4 pcs.	**47263**
	Isotop SE-DE 30	285	2,795	7.0 Hz	4 pcs.	**47268**
	Isotop SE-DE 50	550	5,395	6.6 Hz	4 pcs.	**47266**
	Isotop SE-DE 100	1,080	10,594	6.5 Hz	OR	**OR**
	Isotop SE-DE 170	1,730	16,971	6.5 Hz	OR	**OR**
	Isotop SE-DE 280	2,840	27,860	5.7 Hz	OR	**OR**
SE-DE Elevator 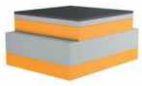	Isotop SE-DE Elevator 13	150	1,471	10.4 Hz	OR	**OR**
	Isotop SE-DE Elevator 30	310	3,041	10.2 Hz	OR	**OR**
	Isotop SE-DE Elevator 50	620	6,082	9.5 Hz	20 pcs.	**47250**
	Isotop SE-DE Elevator 100	1,250	12,262	9.5 Hz	4 pcs.	**47247**
	Isotop SE-DE Elevator 170	2,190	21,483	9.5 Hz	4 pcs.	**47245**
	Isotop SE-DE Elevator 280	3,480	34,138	8.8 Hz	4 pcs.	**47243**

SE-DE and SE-DE Elevator not stock items. Delivery time on request (approx. 15 working days from the factory)
OR ... On request

Isotop SE-DE with anti-slip plate (unloaded)

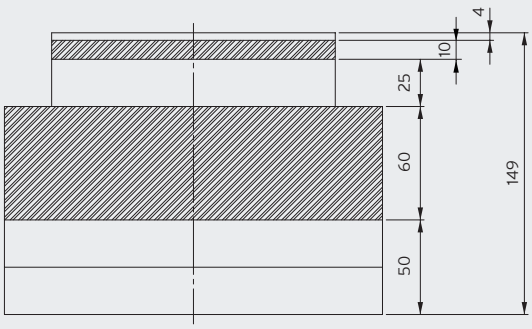

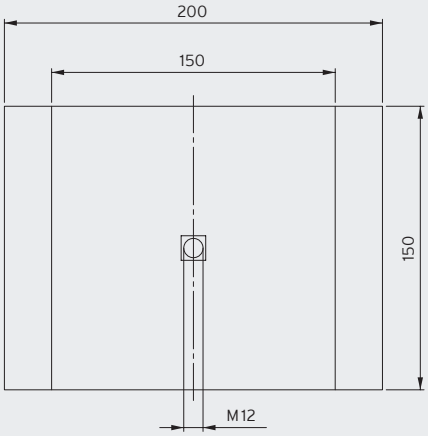

Isotop SE-DE Elevator with anti-slip plate (unloaded)

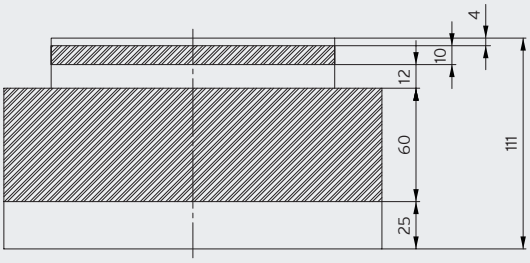

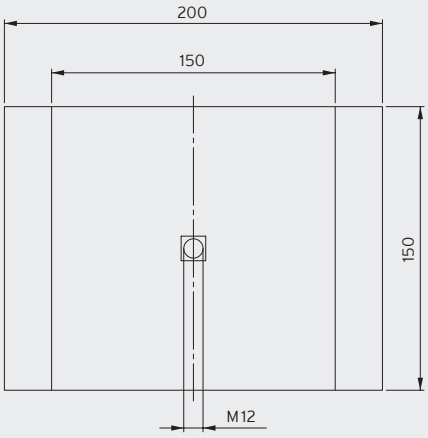

Bearing of a lift system with overhead cable guide

Chiller indoor unit

Isotop SE-DE

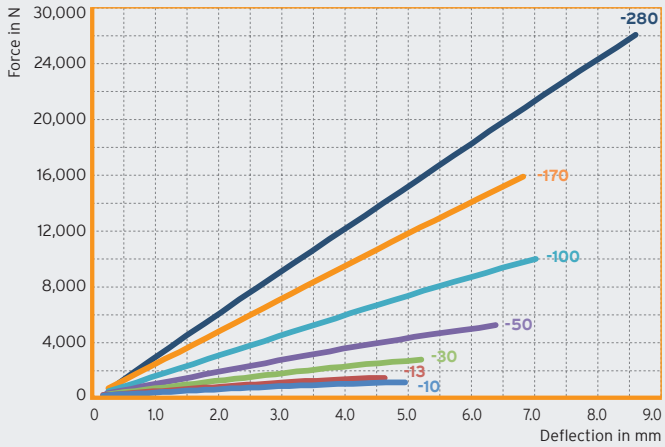

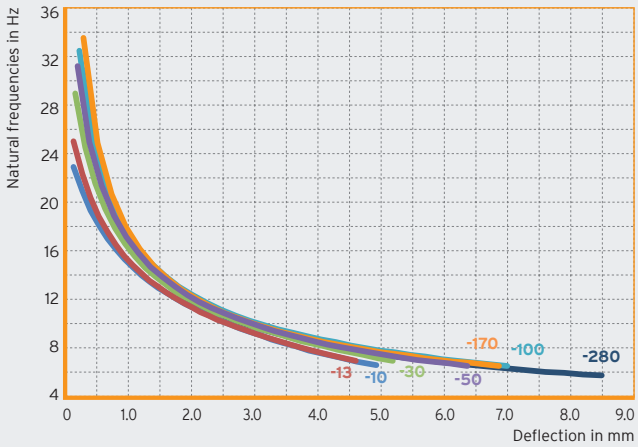

Isotop SE-DE Elevator

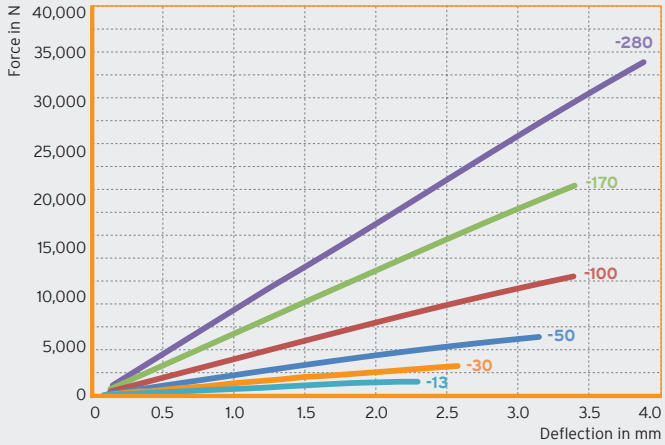

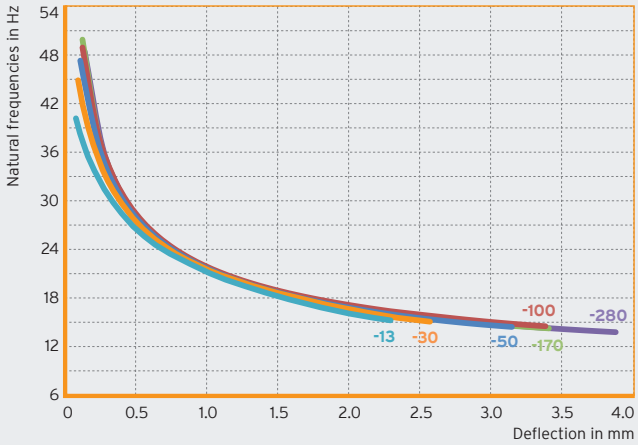

Isotop ENI

Structure-borne noise-insulated machine mountings with ball-and-socket joint

- Natural frequency from 9.7 Hz
- High load capacity of up to 260 kg per machine mounting
- 25 mm Sylomer® or Sylodyn® inside
- Integrated height adjustment
- Ball-and-socket joint to compensate for uneven floors and inclinations
- Galvanised thread and polyamide plastic plate for high corrosion resistance

			Material thickness	Maximum load in kg	Maximum load in N	Natural frequency at maximum load	Packaging unit	Order number
ENI	Isotop ENI-60-25-80	M10	25 mm	61	598	10.7 Hz	50 pcs.	**45150**
	Isotop ENI-115-25-80	M10	25 mm	115	1,128	10.9 Hz	50 pcs.	**45152**
	Isotop ENI-175-25-80	M10	25 mm	176	1,726	10.8 Hz	50 pcs.	**45154**
	Isotop ENI-285-25-80	M10	25 mm	260	2,551	9.7 Hz	50 pcs.	**45155**

Additional thread and plate sizes available on request for purchase quantities of more than 200 pcs.

Isotop ENI-xx-25-80 (unloaded)

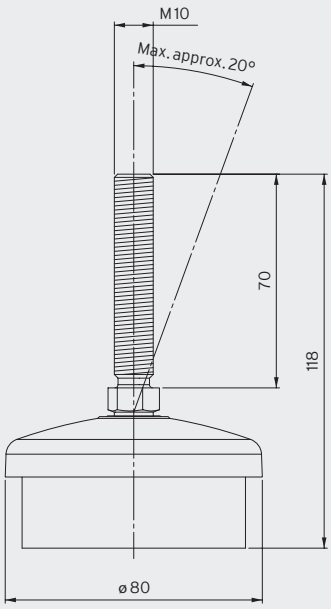

HVAC system installed in cellar

Isotop ENI 60-25-80

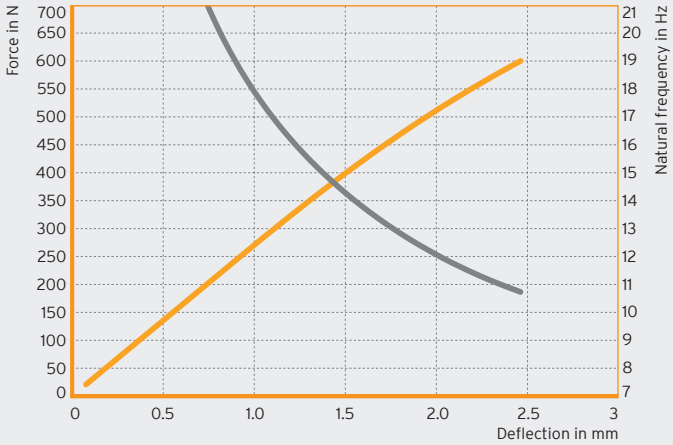

Isotop ENI 115-25-80

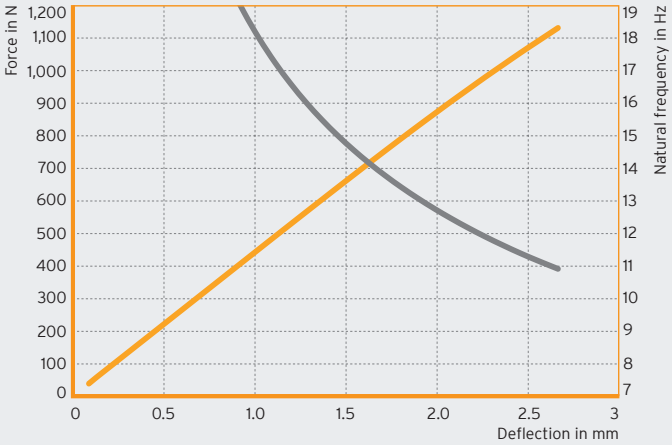

Isotop ENI 175-25-80

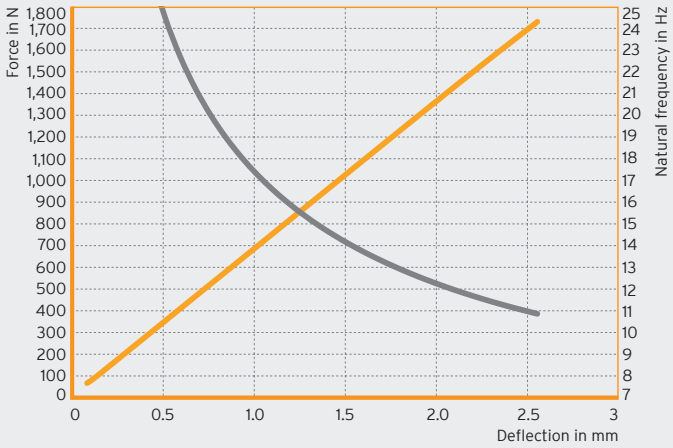

Isotop ENI 285-25-80

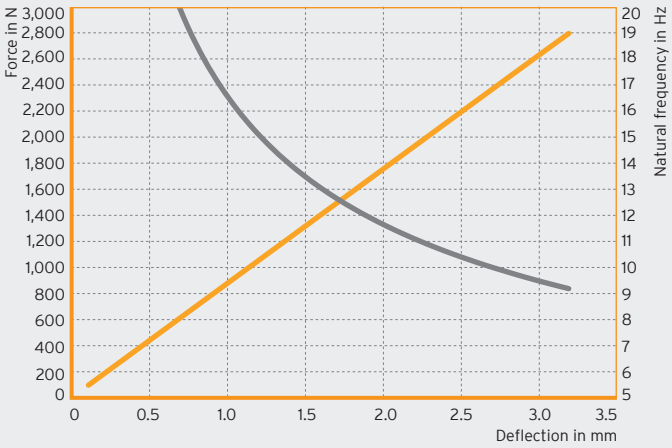

Force in N

Natural frequency in Hz

Sylomer® Compressor Grommet CGR

Compressor grommets made from high-performance dampers

- Load capacity of up to 20 kg per compressor base
- Sylomer® inside
- Integrated steel sleeve for secure installation with high starting torque
- Designed for use with M 8 screws
- Weather- and UV-resistant
- Extremely effective even at low temperatures

	Type	Dimension	Maximum load in kg	Maximum load in N	Natural frequency at maximum load	Packaging unit	Order number
Compressor Grommet CGR	CGR-3-37x25-M8-S	37 × 25 mm	3	29	14.0 Hz	1 set (= 48 pcs.)	**42177**
	CGR-6-37x25-M8-S	37 × 25 mm	6	59	13.7 Hz	1 set (= 48 pcs.)	**42178**
	CGR-10-37x25-M8-S	37 × 25 mm	10	98	12.7 Hz	1 set (= 48 pcs.)	**41652**
	CGR-20-37x25-M8-S	37 × 25 mm	20	196	13.0 Hz	1 set (= 48 pcs.)	**42179**

Purchasing quantity = packaging unit or multiple thereof

Minimum order quantity of 1.000 units for bespoke orders

Sylomer® Compressor Grommet CGR (unloaded)

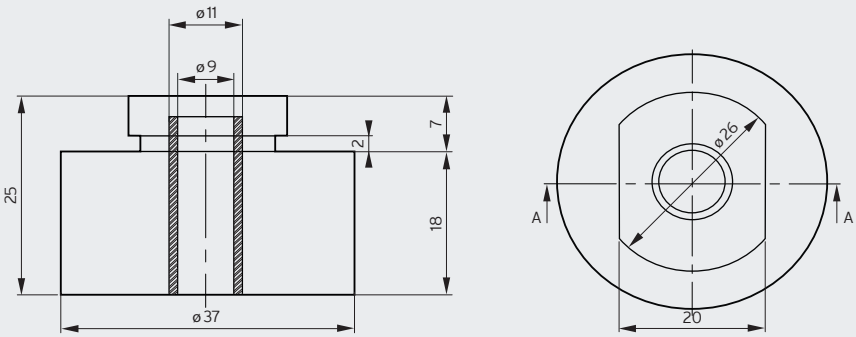

Sylomer® Compressor Grommet CGR

Elastic Washers EW

Washers for decoupling screw connections

- Sylodyn® inside
- Available with and without centring aid
- For screw sizes M8, M10, M12 and M16
- Weather and UV resistant

	Type	Diameter [A]	Height	Hole diameter [B]	Packaging unit	Order number
Elastic Washer EW	EW-M8-6	35 mm	6 mm	9 mm	1 Set (=100 Stk.)	**37523**
	EW-M10-6	40 mm	6 mm	11 mm	1 Set (=100 Stk.)	**37524**
	EW-M12-6	50 mm	6 mm	13 mm	1 Set (=100 Stk.)	**37525**
	EW-M16-6	55 mm	6 mm	17 mm	1 Set (=100 Stk.)	**37526**
	EW-M8-8	28 mm	8 mm	9 mm	1 Set (=100 Stk.)	**37511**
	EW-M10-8	34 mm	8 mm	11 mm	1 Set (=100 Stk.)	**37512**
	EW-M12-8	44 mm	8 mm	13 mm	1 Set (=100 Stk.)	**37513**
	EW-M16-8	56 mm	8 mm	17 mm	1 Set (=100 Stk.)	**37514**
	EW-M8-12	35 mm	12 mm	9 mm	1 Set (=100 Stk.)	**37519**
	EW-M10-12	40 mm	12 mm	11 mm	1 Set (=100 Stk.)	**37520**
	EW-M12-12	50 mm	12 mm	13 mm	1 Set (=100 Stk.)	**37521**
	EW-M16-12	55 mm	12 mm	17 mm	1 Set (=100 Stk.)	**37522**
	EW-M8-21	28 mm	21 mm	9 mm	1 Set (=100 Stk.)	**37515**
	EW-M10-21	34 mm	21 mm	11 mm	1 Set (=100 Stk.)	**37516**
	EW-M12-21	44 mm	21 mm	13 mm	1 Set (=100 Stk.)	**37517**
	EW-M16-21	56 mm	21 mm	17 mm	1 Set (=100 Stk.)	**37518**
	EW-M20-21	60 mm	21 mm	21 mm	1 Set (=100 Stk.)	**45228**
	EW-M27-21	70 mm	21 mm	28 mm	1 Set (=100 Stk.)	**45229**

Purchasing quantity = packaging unit or multiple thereof

EW Mxx-6 (unloaded)

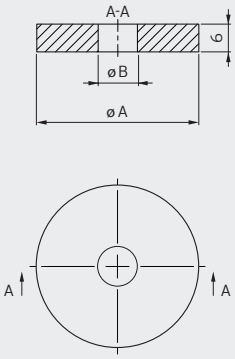

EW Mxx-8 (unloaded)

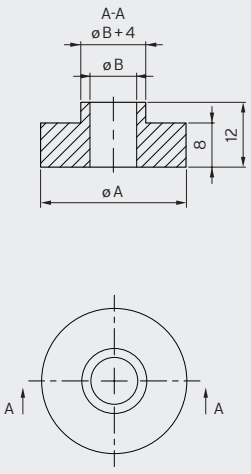

EW Mxx-12 (unloaded)

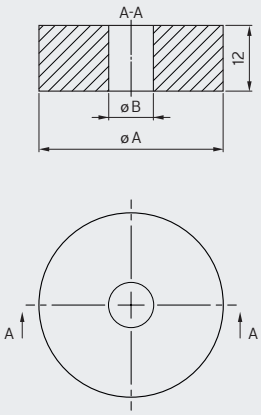

EW Mxx-21 (unloaded)

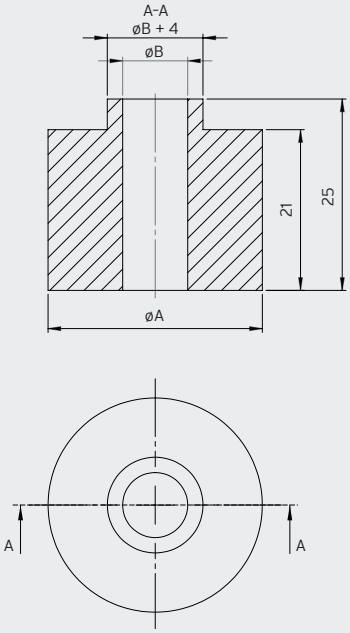

Isotop Transformer Pad TR

High-performance pads for transformers with wheels

- Natural frequencies from 8.5 Hz
- Sylodyn® inside
- Load capacities for transformers weighing up to 10 t
- Available with reel width of 40–70 mm and reel diameter of up to 200 mm

		Reel diameter	Max. load per set in kg	in N	Natural frequency at maximum load	Packaging unit	Order number
Transformer Pad TR	TR-400/150-100	up to 100 mm	400	3,925	11.3 Hz	1 set (= 4 pcs.)	**43099**
	TR-1000/150-100	up to 100 mm	1,000	9,810	9.5 Hz	1 set (= 4 pcs.)	**43100**
	TR-2500/150-100	up to 100 mm	2,500	24,525	9.9 Hz	1 set (= 4 pcs.)	**43101**
	TR-5000/150-100	up to 100 mm	5,000	49,050	9.7 Hz	1 set (= 4 pcs.)	**43102**
	TR-10000/150-100	up to 100 mm	10,000	98,100	8.5 Hz	1 set (= 4 pcs.)	**43103**
	TR-400/150-150	101 - 150 mm	400	3,925	11.3 Hz	1 set (= 4 pcs.)	**43202**
	TR-1000/150-150	101 - 150 mm	1,000	9,810	9.5 Hz	1 set (= 4 pcs.)	**43204**
	TR-2500/150-150	101 - 150 mm	2,500	24,525	9.9 Hz	1 set (= 4 pcs.)	**43206**
	TR-5000/150-150	101 - 150 mm	5,000	49,050	9.7 Hz	1 set (= 4 pcs.)	**43208**
	TR-10000/150-150	101 - 150 mm	10,000	98,100	8.5 Hz	1 set (= 4 pcs.)	**43210**
	TR-400/150-200	151 - 200 mm	400	3,925	11.3 Hz	1 set (= 4 pcs.)	**43203**
	TR-1000/150-200	151 - 200 mm	1,000	9,810	9.5 Hz	1 set (= 4 pcs.)	**43205**
	TR-2500/150-200	151 - 200 mm	2,500	24,525	9.9 Hz	1 set (= 4 pcs.)	**43207**
	TR-5000/150-200	151 - 200 mm	5,000	49,050	9.7 Hz	1 set (= 4 pcs.)	**43209**
	TR-10000/150-200	151 - 200 mm	10,000	98,100	8.5 Hz	1 set (= 4 pcs.)	**43211**

Not held in stock. Delivery time on request (approx. 15 working days from the factory)

Isotop Transformer Pad TR (unloaded)

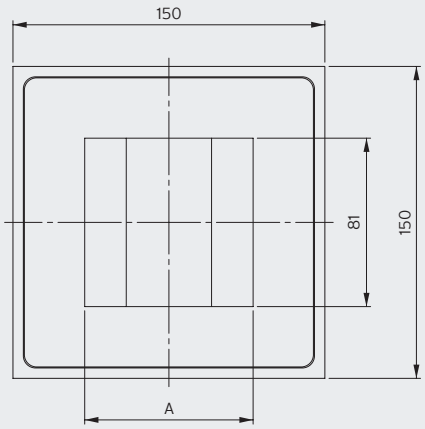

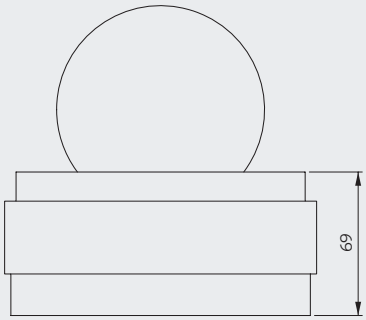

Dimension inlay [A]:
TR-xxx-100 A = 81 mm
TR-xxx-150 A = 105 mm
TR-xxx-200 A = 119 mm

Vibration decoupled bearing of a distribution transformer

TR-400

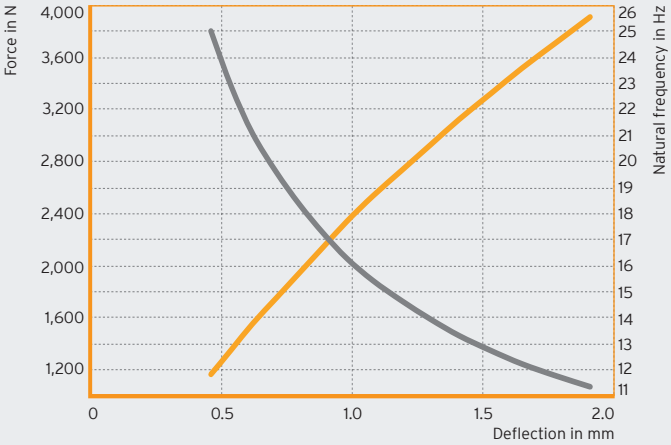

TR-1000

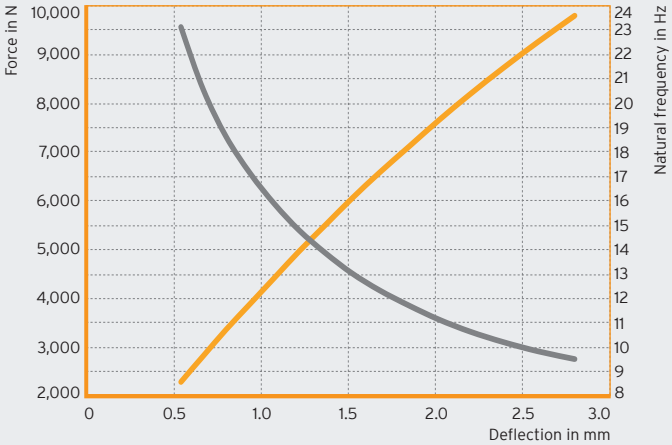

TR-2500

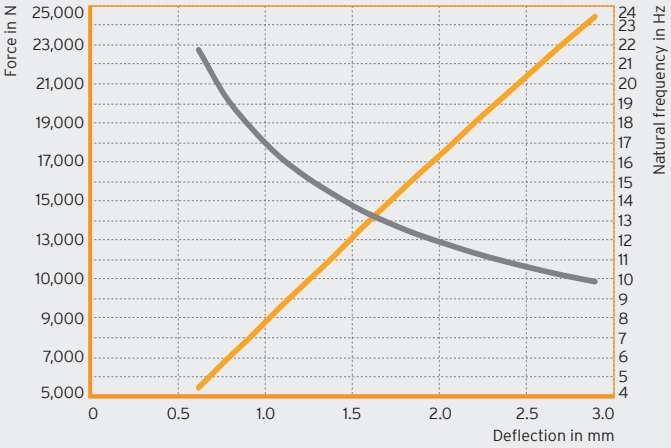

TR-5000

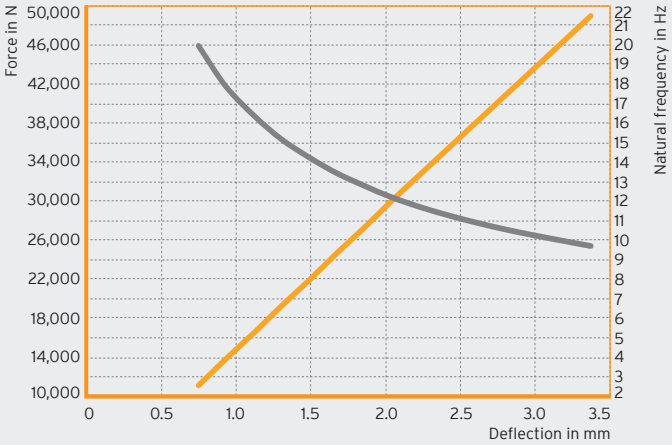

TR-10000

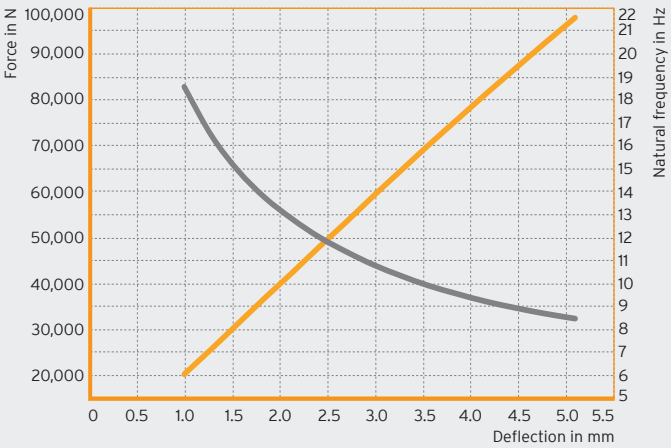

Force in N

Natural frequency in Hz

Notes

WMUF-AT

Getzner Werkstoffe GmbH
Herrenau 5
6706 Bürs
Austria
T +43-5552-201-0
F +43-5552-201-1899
info.buers@getzner.com

Getzner Werkstoffe GmbH
Am Borsigturm 11
13507 Berlin
Germany
T +49-30-405034-00
F +49-30-405034-35
info.berlin@getzner.com

Getzner Werkstoffe GmbH
Grünwalder Weg 32
82041 Oberhaching
Germany
T +49-89-693500-0
F +49-89-693500-11
info.munich@getzner.com

Getzner Spring Solutions GmbH
Gottlob-Grotz-Str. 1
74321 Bietigheim-Bissingen
Germany
T +49-7142-91753-0
F +49-7142-91753-50
info.stuttgart@getzner.com

Getzner France S.A.S.
Bâtiment Quadrille
19 Rue Jacqueline Auriol
69008 Lyon
France
T +33-4 72 62 00 16
info.lyon@getzner.com

Getzner France S.A.S.
19 Rue Hans List
78290 Croissy-sur-Seine
France
T +33 1 88 60 77 60

Getzner Vibration Solutions Pty Ltd
Unit 1 Number 2-22
Kirkham Road West,
Keysborough Victoria 3173
Australia

Getzner India Pvt. Ltd.
1st Floor, Kaivalya
24 Tejas Society, Kothrud
Pune 411038, India
T +91-20-25385195
F +91-20-25385199
info.pune@getzner.com

Nihon Getzner K.K.
6-8 Nihonbashi Odenma-cho
Chuo-ku, Tokyo
103-0011, Japan
T +81-3-6842-7072
F +81-3-6842-7062
info.tokyo@getzner.com

Getzner Materials (Beijing) Co., Ltd.
No. 905, Tower D, the Vantone Center
No. Jia 6, Chaowai Street, Chaoyang District
10020, Beijing, the P.R.C.
T +86-10-5907-1618
F +86-10-5907-1628
info.beijing@getzner.com

Getzner USA, Inc.
8720 Red Oak Boulevard, Suite 460
Charlotte, NC 28217, USA
T +1-704-966-2132
info.charlotte@getzner.com

www.getzner.com

Our printing is **climate neutral.**

Subject to technical modifications and changes to the range without notice.

Our printing is **climate neutral.**

PC Isotop Product catalogue en © Copyright by Getzner Werkstoffe GmbH I 09-2022